"IMPACT OF STATCOM ON DISTANCE RELAY"

A DESSERTATION REPORT

Submitted

In partial fulfillment of the

Requirements for the degree of

MASTER OF TECHNOLOGY
IN
POWER SYSTEM ENGINEERING

Guided by:

Dr. BRIJ BHUSHAN

(Assistant. Professor)

Submitted by:

SUBHASH KUMAR MISHRA

(MURMUR1401802)

FACULTY OF ENGINEERING AND TECHNOLOGY

DEPARTMENT OF ELECTRICAL ENGINEERING
MEWAR UNIVERSITY
NH - 79 Gangrar, Chittorgarh, Rajasthan
YEAR-2017

DECLARATION

I, hereby, declare that to the best of my knowledge and belief, the work presented in this dissertation entitled "Impact of STATCOM on Distance Relay" is my original work and is not copied from any other person work (published or unpublished). All sources have been properly acknowledged, and the dissertation contains no plagiarism.

I further declare that I have not previously submitted this work or any version of it in any other courses or award offered by Mewar University or any other Institution.

Name and Signature of the Supervisor | Name and Signature of the candidate

(Asst. Prof. Dr. Brij Bhushan) | (Subhash Kumar Mishra)

CERTIFICATE

This is to certify that the dissertation entitled **"IMPACT OF STATCOM ON DISTANCE RELAY"** submitted by Mr. Subhash Kumar Mishra, embodies the findings of his original dissertation work carried out under my supervision and it partial fulfillment of all the conditions prescribed by Mewar University, Chittorgarh, Rajasthan for the award of the degree of Master of Technology in Power System Engineering. To the best of my knowledge, the matter embodied in this dissertation has been submitted elsewhere for the award of any other degree or diploma.

Signature

Dr. Brij Bhushan

(Name of Supervisor)

Asst. professor Mewar University

(Designation)

Date:

ACKNOWLEDGEMENT

Success of any work depends upon dedication, sincerity and hard work. It also requires some ingredients such as motivation, guidance, encouragement and time. Whole hearted efforts altogether makes the project useful and meaningful.

First I want to thank my family for always being there for me. Their love, support, patience and encouragement to pursue my goals made this thesis possible.

I have unique pleasure in thanking our guide **Mr. Rahul Mishra** & coordinator **Mr. Anuj Kumar** for his unflinching devotion and help, which led us to completion of this dissertation.

I place on record our sincere thanks to **Dr. Brij Bhushan**, Asst. professor, Department of Electrical Engineering, providing necessary guidance and back up throughout the whole course of our dissertation.

I owe my special thanks to all faculty members of the Department of Electrical Engineering for the knowledge they imparted to us throughout our course.

COPY RIGHT TRANSFER CERTIFICATE

Title of the dissertation: **Impact of STATCOM on Distance Relay**

Name of Research Scholar: Subhash Kumar Mishra

Copyright Transfer

The understanding hereby assigns to the Mewar University all right under copyright that may exist in and for above dissertation submitted for the award of the M. TECH degree.

Signature of Research scholar

ABSTRACT

With the increase in the number of Static Synchronous Compensator (STATCOM) type FACTS devices in transmission lines, operation of distance relays in transmission lines are affected. It is very important that the distance relays do not maloperate under system fault conditions, as this will result in the loss of stability or the security of the system, which defeats the main objective of installing a STATCOM. As STATCOM type FACTS devices has fast response and their functional characteristics and control system introduce dynamic changes during fault conditions in a transmission line it is important that distance relays perform correctly irrespective of such dynamic changes introduced during fault. In this dissertation, the measured impedance at the relaying point is calculated and the analytical and simulation results of the application of distance relay for the protection of transmission line incorporating Static Synchronous Compensator (STATCOM) are presented. A detailed model of STATCOM and its control is proposed and integrated into the transmission system for the purposes of accurately simulating the fault transient.

An apparent impedance calculation procedure for transmission line incorporating STATCOM based on the power frequency sequence circuits has been explored. The simulation results show the impact of STATCOM on the distance protection relay during the different fault condition; the influence of location of STATCOM, the setting of STATCOM control parameters and the operation mode of STATCOM are studied as well. The results are presented in relation to a typical 138kV transmission system employing STATCOM. Followed by a review of the effects of a STATCOM connected at the midpoint of a transmission line on the performance of distance protection relays.

TABLE OF CONTENTS

Content Page No.

Content Page No.

1

-LITERATURE SURVEY

-INTODUCTION

1.1 LITERATURE SURVEY

Power system protection is one of the most important and exciting topic, which has been attracting the attention of both academic institutions and utilities ever since Power systems came into being. For the proper operation of the power system, an effective, efficient and reliable protection scheme is desirable. The power system components, which include synchronous machines, bus bar, transformer, transmission line and distribution system consisting of complex and composite loads, are designed to operate under normal conditions of voltage, frequency and power factor, etc. however , due to any reason , say some fault if any of these quantities become abnormal i.e. voltage become very high or very low , current become very high , power factor become very poor or line flows become abnormally very high it is necessary that there should be a device which senses these abnormal conditions and if so, the element or component where such abnormality has taken place is removed , i.e. deleted from the rest of the system as soon as possible . This is necessary because the power system components can never be designed to withstand the worst possible conditions, as it will make the whole system highly uneconomical. Therefore, if such abnormal takes place in any element or component of the power system network, it is desirable that the affected component is removed from the rest of the system reliably and quickly so as to restore power to the remaining system under normal conditions as soon as possible.

The development of the modern digital technology has resulted in fast, compact, reliable and efficient relaying schemes for the protection of the transmission lines. In the past, over current relay were used for protecting transmission lines. Because of the inherent demerits of these relays (e.g. shifting of balance point with the type of the fault or with changes in generation or switching), they were replaced by distance relays such as plane impedance relays, angle impedance relays, angle admittance relays etc.

In the beginning the electromechanical relays were used. These had several drawbacks as such as high burden on instrument transformers; long operating time, contact problem etc. solid state relays which avoid most of these disadvantages are gradually replacing electromagnetic relays.

Static relay have also been increasingly used in recent years because of their inherent advantages of compactness, lower burden, less maintenance and higher speed. Though successfully used, they suffer from number of disadvantages, e.g. inflexibility, duplication of specification efforts, inductility to changing system conditions, complexity and cost. Digital schemes avoid most of these disadvantages. Programmable equipment can respond fast and may be used to implement complex threshold characteristics at low cost. They can also be self checking in nature thereby requiring less maintenance and providing greater reliability.

L.J.Lewis Blackburn [1] have explained that any protection scheme, which is required to safeguard the power system components against abnormal conditions such as faults, consists basically of two elements: (i) protective relays (ii) Circuit breaker. The protective relay functions as a sensing device. It senses the fault; determine its location and finally it sends the command to the circuit breaker by closing its trip coil. The circuit breaker after getting command from the protective relay disconnects the faulty element from the rest of the system. Thus it is seen that the protective relay which is primarily the brain behind the whole scheme plays a very important role. Therefore proper care should be taken in selecting an appropriate protective rely, which is reliable, efficient and fast in operation.

Adaptive relaying is a new philosophy in protecting electric power systems. Adaptive relaying utilizes the continuous changing status of power system as the basis for on-line adjustment of the power system relay settings. Many researchers are working on this and some of them have presented papers in different areas of power system.

H.Horowits, A.G.Phadke and J.S.Thorp [2] have given the objective of providing adaptive relay setting is to minimize the compromises that accumulate during adaptive relay setting at the present time, are calculated from the short circuit studies that include a wide variety of system configuration , generation schedules and reasonable voltage excursions. The users' setting philosophy and criteria establishes limits to assure the maximum possible coverage in the fastest possible time. The settings are the result of engineers' judgment as to best overall protection.

G.D.Rockefeller, C.L.Wargner, J.R.Linders, Hicks and Licky [3] explained the key aspect of the setting is the choice of the contingencies for which coordination is attempted.

While all imaginable faults must be cleared, it isn't usually feasible to achieve coordination for every conceivable permutation of power system reasonable probabilities of being encountered. Even then he usually must make compromises accepting some mis-coordination or slim timing margins for some contingencies.

A.K.Jampala, S.S. Venkata, and M.J.Damborg [4] thrown light on the concept and computational issues related with adaptive scheme that one would set the relay for existing conditions. Thus one should be able to cope with two possibilities namely slowly varying system conditions and contingencies. Then a natural question that arises is; under what circumstances and how often do the relay setting need to be changed? The answer is either an on operators request or a periodic basis. The relay settings will be changed at least twice, one for peak conditions and other for off peak conditions during a day .the two settings will differ for a few individual relays but statically they will close.

B.Chattopadhyay, M.S.Sachdev and T.S. Sidhu [5] have described that coordination software for adaptive relaying system that it must recognize in real time, changes in the system operating state and adjust relay settings accordingly . to perform these functions , software modules for detecting topology of the system , estimating the system state , calculating fault currents and determining the relay settings have been developed .

M.S.Sachedev, T.S.Sidhu and B.K.Tendulkar [6] have expressed their views on the topology detection technique suitable for use in adaptive relaying applications. Means for collecting information, handling complex logic and communicating with other relays and computers are provided in most microprocessor based relays. This has made it possible to continuously monitor the state of a network, analyze it in real time, and change the settings to those most suitable for each operating state. The knowledge of the network topology is vital for implementing the system.

1.2 INTRODUCTION

With the ongoing growth of the electric power demand and deregulation in the electrical power industry, numerous changes have been introduced to modern electricity industry. Transmission systems are now being pushed closer to their stability and thermal limits, and energy needs to be transported from the generation point to the end user along the most desirable path. Traditional updating of a transmission system by constructing new transmission lines becomes extremely difficult because of economic and environmental pressures. High efficiency in terms of better utilization of existing transmission lines, without compromising on the quality and reliability of electrical power apply has thus to be found via alternative means. In this respect, due to the recent advances in high power semiconductor technology, Flexible AC transmission System (FACTS) technology has been proposed to solve this problem [7, 8]. However, because of the added complexity due to the interaction of FACTS devices with the transmission system, the transients superimposed on the power frequency voltage and current waveforms (particularly under faults) can be significantly different from those systems not employing FACTS devices and it will result in rapid changes in system parameters such as line impedance and power angle. It is thus vitally important to study the impact of the FACTS devices on the traditional protection relay scheme such as the impedance-based distance protection relay [9]. STATCOM is one of the most widely used FACTS devices. It is based on a voltage source convert and can inject an almost sinusoidal current with variable magnitude and in quadrature with the connecting line voltage. It is widely used at the mid-point of a transmission line or heavy load area to maintain the connecting point voltage by supplying or absorbing reactive power into the power system [10]. Because of the presence of STATCOM devices in a fault loop, the voltage and current signals at relay point will be affected in both steady and transient state. This impact will affect the performance of exiting protection methods, such as distance relay. Some research has been done on the performance of the distance relay for a transmission system with different FACTS devices. The work in [11] presents the analytical results based on steady-steady model of STATCOM, and has studied the impact of STATCOM on distance relay at different load levels. In [12], the voltage-source model of FACTS devices is used to study the impact of FACTS on the tripping boundaries of distance

relay. The work in [13] shows that thyristor controlled series capacitor (TCSC) has a big influence on the mho characteristic, reactance and direction and makes protection region unstable. The study in [14] demonstrates that the presence of FACTS devices on a transmission line will affect the trip boundary of distance relay, and both the parameters of the FACTS device and its location have impact on the trip boundary. All the studies show that when the FACTS devices is in a fault loop, its voltage and current injection will affect both the steady and transient components in voltage and current and hence the apparent impedance seen by a conventional distance relay is different from the that on a system without FACTS.

This report will analyze and explore the impact of STATCOM employed in a transmission system on the performance of distance relay. First, a detailed model of STATCOM is proposed and secondly, the analytical results based on symmetrical component transformation for single phase to ground fault on a transmission system employing STATCOM are presented, the simulation results clearly show the impact of STATCOM devices on the performance of distance relay.

To demonstrate and simulate the two source power system including STATCOM at the mid-point and DISTANCE RELAY at the sending end, the PSCAD/EMTC software is used. PSCAD is a graphical user interface, providing a very flexible interface to the electromagnetic transient simulation software EMTDC.

EMTDC is the library of power system component models and a procedure, which constitutes the simulation software packages are referred to as “PSCAD/EMTDC” and the combination allows the engineers to set up and run a wide variety of power system simulation.

2

DISTANCE RELAY

2.1 Introduction

Distance relaying belongs to the principle of ratio comparison. The ratio is between voltage and current, which in turn produces impedance. The impedance is proportional to the distance in transmission lines, hence the distance relaying designation for the principle. This principle is primarily used for protection of high voltage transmission lines. In this case the over current principle can not easily cope with the change in the direction of the current flow, which is common in the transmission but no so common in radial distribution lines. Computing the impedance in the three-phase system is a bit involved in each type of the fault produces a different impedance expression. Because of these differences the settings of the distance relay are needed to be selected to distinguish between the ground and phase faults. In addition fault resistance may create problem for distance measurement because of the fault resistance may be difficult for predict. It is particularly challenging for distance relays to measure correct fault impedance when the current infeed from the other end of the line create an unknown voltage drop on the fault resistance. This may contribute to erroneous computation of the impedance, called apparent impedance 'seen' by the relay located at the end of the line and using the current and voltage measurement just from the end. Once the impedance is computed, it is compared to the settings that define the operating characteristics of the relay. Based on the comparison, a decision is made if a fault has occurred, if so in what zone.

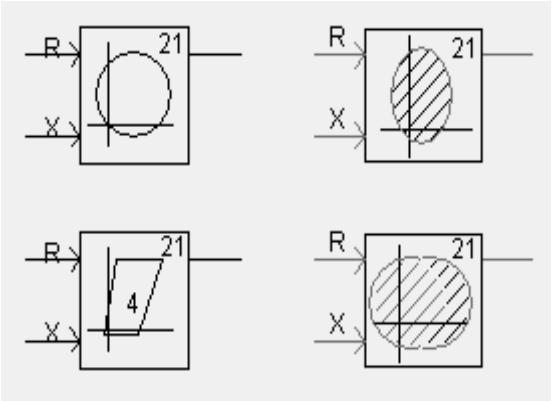

Figure 2.1 Different Operating Characteristics of Distance Relay

Due to variety of application reasons, the operating characteristics of distance relay may have different shapes; the quadrilateral and MHO being the most common. The different operating characteristics are shown in figure 2.1(Blackburn, 1998) [1].

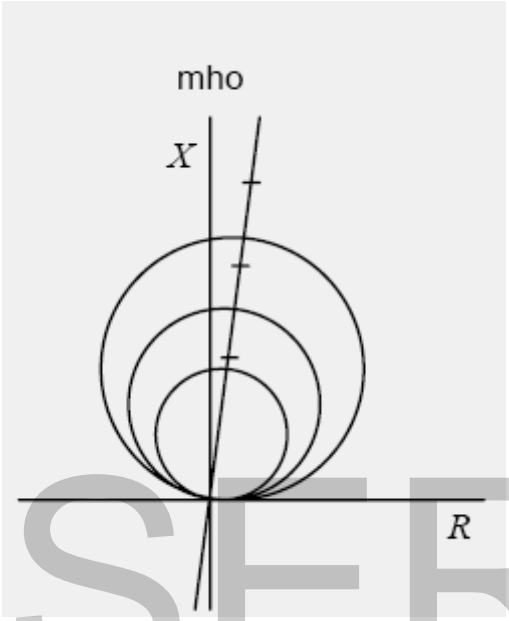

Figure 2.2 Operating Characteristics of Three Zone Impedance (MHO) Relay

As mentioned earlier, the impedance relay is set to recognize multiple zones of protection. As shown in figure 2.2, the first zone (zone 1) is set to act instantaneously for faults on protective lines, while the other two zones (zone 2 & zone 3) protect both main line and adjacent lines with time delay sin creasing in discrete steps. Excepting for the first zone, multiple zones of protection can be achieved by coupling time delay units to relay units, such that time delay increases with additional zones. The zones of protection of such relays are in sensitive to system changes, unless the change falls within one of the zones of the relay. The relay, which are having an offset characteristics, (i.e. with center point of relay characteristics not at origin of R-X plane), are needed for directional sensing.

2.2 Modeling of Distance Relay

Under normal circumstances, the three-zone protection scheme of distance relay provides both primary and backup protection on the primary line, for all phase faults. Thus,

defining the reach of all the zones along with the time delay associated with each zone can completely model a distance relay. The time delay of the zone 2 and zone 3 has to be calculated such that, all faults have to be cleared within a minimum allowable time delay (TDMX). However some delay in time is required to be given for the sequential breaker action to be coordinated system would result in indicating impedance setting values for all three zones (in terms of various impedance taps available on the relay) and also the timer settings associated with second and third zones.

1.3 2.3 Design of Zones

The reach and the coordination of the delay of each zone can be explained with help of diagram shown in figure 2.3

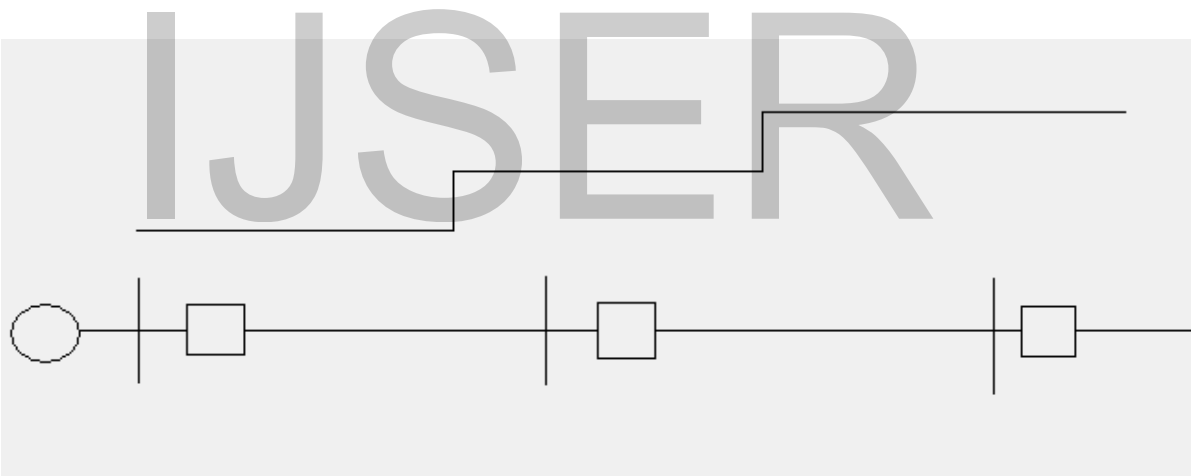

Figure 2.3 Three stepped protection of transmission line

2.3.1 Zone 1 setting

The zone 1 protection of primary line offers primary protection of the primary line. It is set for the length of primary line times a factor called the reach factor on primary line for zone 1 (MDZ1) for instantaneous action. Atypical value of MDZ1 is 0.8 to 0.9 line segment Ap in the figure 2.3, represents the zone 1 of relay Ra. For faults in zone 1, the relay trips instantaneously. As such, this zone is not associated with any time.

1.3.1 2.3.2 Zone 2 setting

The primary protection the remaining part of the primary line (line segment Bp) is covered by zone 2, which acts after certain interval of time T1. The reach of this zone is beyond the remote bus of the line, up to line segment Aq, so it is gives a protection to the adjacent line also. Zone 2 is set to a factor known remote bus coverage factor (MDRB) times the primary line impedance. Atypical value of MRDB is about 1.2, for a short length adjacent line, the second zone also provide backup protection. It has to be insured that this second zone does not overlap with any second zone of distance relays on remote lines. The relay trip with a time delay referred to as zone 2 time delay (T1). The typical range of time delay for zone 2 is 0.3-0.6 sec.

1.3.2 2.3.3 Zone 3 setting

The third zone, which acts after a further time delay provides a backup protection to all, lines emanating from the remote bus. As such, it is desirable that it is set to reach entire length of the longest remote line. Thus, zone 3 of relay Ra exists over line segment Ar. However, the pickup zone 3 of relay has to be chosen in such way that it do not pickup under worst loading conditions. Also this third zone has to be properly coordinated with third zone of relays on remote lines: such that the time delay for tripping in this zone, known as T3, should be less than TMDX.

3

STATCOM

3.1 Introduction

The Static Synchronous Compensator (STATCOM) is one of the new generation Flexible AC Transmission Systems (FACTS) devices with promising future of applications. There are two basic controls which can be implemented in the STATCOM. One is the AC voltage regulation of the power system at the bus bar where the STATCOM is installed and another is the control of the DC voltage across the DC capacitor inside the STATCOM. AC voltage regulation is realized by controlling the reactive power interchange between the STATCOM and a power system. If the STATCOM converter is based on the Pulse Width Modulation **(PWM)** algorithm, the DC voltage across the DC capacitor must be constant. It has been suggested that two separate controllers are assigned to these two STATCOM functions. However, from point of view of control system design, a power system installed with the dual functional STATCOM is a two-input two-output multivariable system when both STATCOM AC and DC voltage controls are implemented. Hence closed-loop system stability can only be guaranteed when AC and DC voltage regulators are designed jointly or in co-ordination.

3.2 STATCOM OPERATION

STATCOM is a converter type FACTS device, which generally provides superior performance characteristics, compared with conventional compensation methods employing thyristor-switched capacitors and thyristor-controlled reactors. It also offers the unique potential to exchange real power directly with the ac system, providing powerful new options for flow control and the counteraction of dynamic disturbances.

The schematic diagram of a STATCOM is shown in Figure 3.1, the charged capacitor C_d, provides a DC voltage to the converter, which produces a set of controllable three-phase output voltages synchronous with the AC power system. By varying the amplitude of the output voltage E1, the reactive power exchange between the converter and the AC system can be controlled. [15]-[16] If the amplitude of the output E_1 is increased above (Figure 3.2) the AC system voltage V_T, current flows through the reactance of the converter (coupling transformer) and a leading current is produced, i.e. the STATCOM is

seen as a capacitor by the AC system and reactive power is generated. Decreasing the amplitude of the output voltage below that of the AC system, a lagging current results and the STATCOM is seen as an inductor. In this case reactive power is absorbed. If the amplitudes are equal no power exchange takes place.

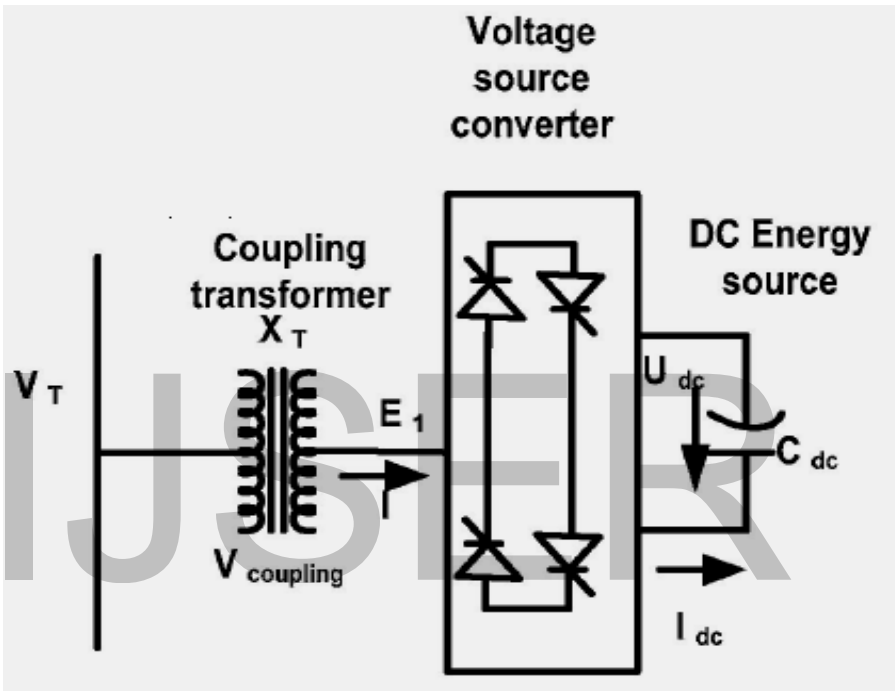

Figure 3.1 Static Synchronous compensator

A practical converter is not loss less. If corrective action is not taken, the energy stored in this capacitor would be consumed by the internal losses of the converter. By making the output voltages of the converter lag the AC system voltages by a small angle, the converter absorbs a small amount of active power from the AC system to balance the losses in the converter. The mechanism of phase angle adjustment can also be used to control the active power generation (Figure 3.2). If the converter is restricted to operate for reactive power exchange only, then the AC output voltage is governed by only controlling the magnitude of the DC link voltage. This is possible due to the fact that magnitude of AC output voltage is directly proportional to DC capacitor voltage.

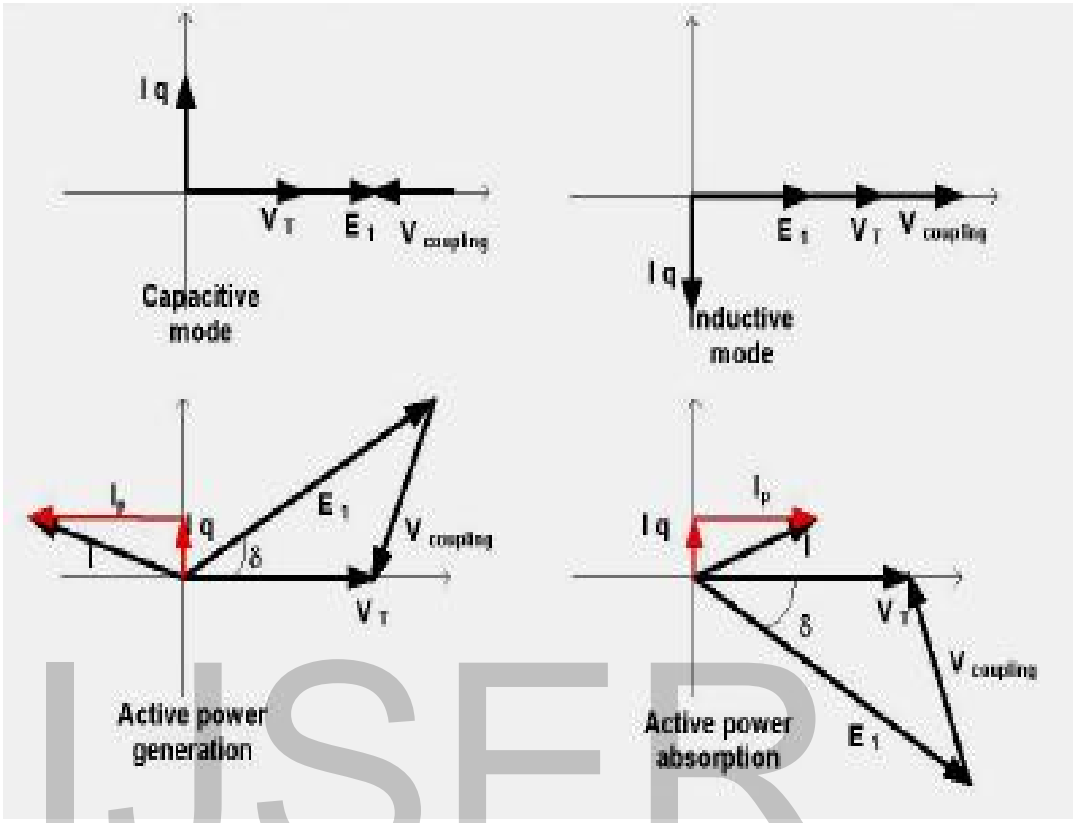

Figure 3.2 STATCOM operating in inductive and capacitive modes

The V-I characteristics of a STATCOM is shown in Figure 3.3, a STATCOM can provide both capacitive and inductive compensation and is able to control its output current over the rated maximum capacitive or inductive range independently of the ac system voltage. This feature is the main advantage of the STATCOM over StaticVARCompensator (SVC) [16]; that is STATCOM can provide full capacitive output current at any system voltage, practically down to zero.

This is in contrast to the SVC that can supply only diminishing output current with decreasing system voltage as determined by its maximum equivalent admittance. This also means that the maximum capacitive or inductive reactance generated by STATCOM decreases linearly with voltage with constant current.

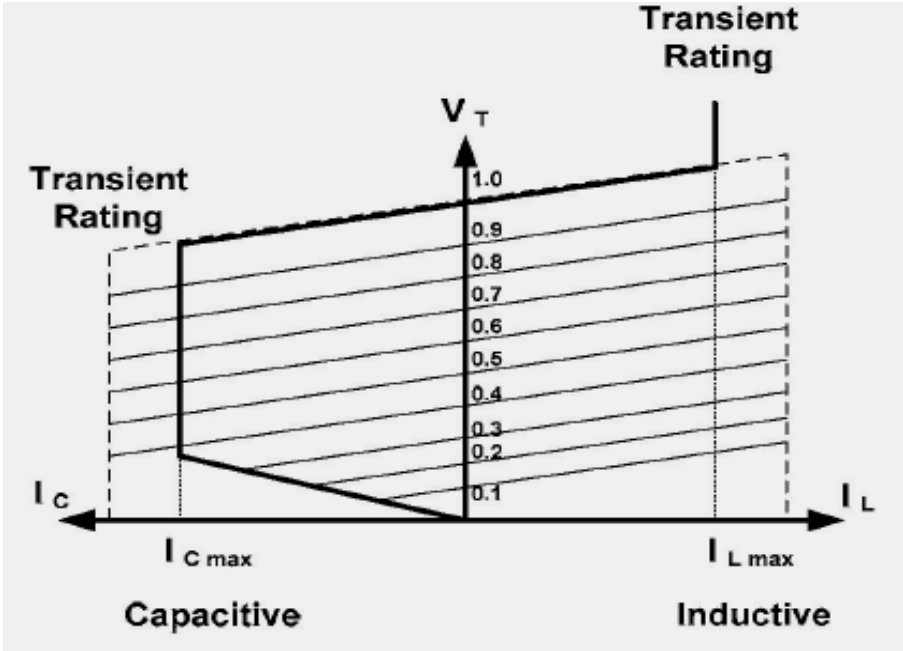

Figure 3.3 V-I Characteristics of STATCOM

3.3 Analysis of STATCOM at the Mid-point

A distance relays protecting a long transmission line with a STATCOM installed at the mid-point is shown in Figure 3.4.

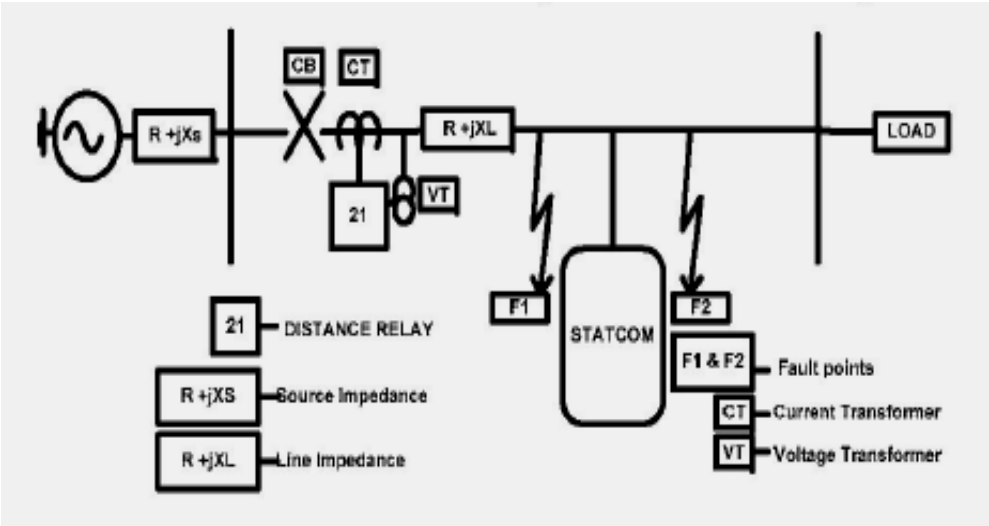

Figure 3.4 Distance Protection Relay in a Transmission system with a STATCOM at the midpoint.

The STATCOM is controlled to boost the voltage at the mid-point of the transmission line. A fault at F1 in front of the STATCOM will not affect the relay performance. The impedance Z calculated by the traditional distance protection relay using the measured voltage and current, in terms of the reach setting, can be expressed by the equation (3.1). The impedance Z_1 is the zone impedance normally set in terms of the positive sequence impedance of the transmission line. The rest of the terms in the equation are necessary to ensure that the relay operates correctly for all the earth faults, and for providing compensation for the mutual coupling effects from parallel line.

$$\mathbf{Z = Z_1 + \{(Ires/Ip).\ Zres\} + \{(Imut/Ip).\ Zmut\}} \qquad (3.1)$$

Where,

Z_1 is the positive sequence impedance reach setting

Ip is the current in the faulted phase

Ires = (Ia+Ib+Ic) is the residual current

Imut is the residual current in the parallel line

Zres = $(Z_0+Z_1)/3$ is the residual impedance, which includes the earth impedance.

Zmut is the mutual compensating impedance

However if the fault is at F2 (Figure 3.4), the STATCOM is in front of the fault. Then the STATCOM injects a current in quadrature with the line voltage feeding the fault and boosting the voltage at the mid-point, which is seen as additional impedance by the relay. This impedance may be either inductive or capacitive, depending on the mode of operation of the STATCOM prior to the fault. In this situation the equation does not apply and therefore the apparent impedance calculated by the distance relay is different from the actual fault impedance. This scenario shall lead to possible under-reach or over-reach of the measuring elements of the distance relay. Hence the relay must be provided with some form of compensation to eliminate the under-reach or the over-reach.

Using equation (3.1) the impedance measured by the relay can be written as

$$\mathbf{Z' = Z + Zcompensating} \qquad (3.2)$$

Where, **Zcompensating** is the additional impedance required to compensate for the effects of STATCOM.

3.4 Modeling of STATCOM

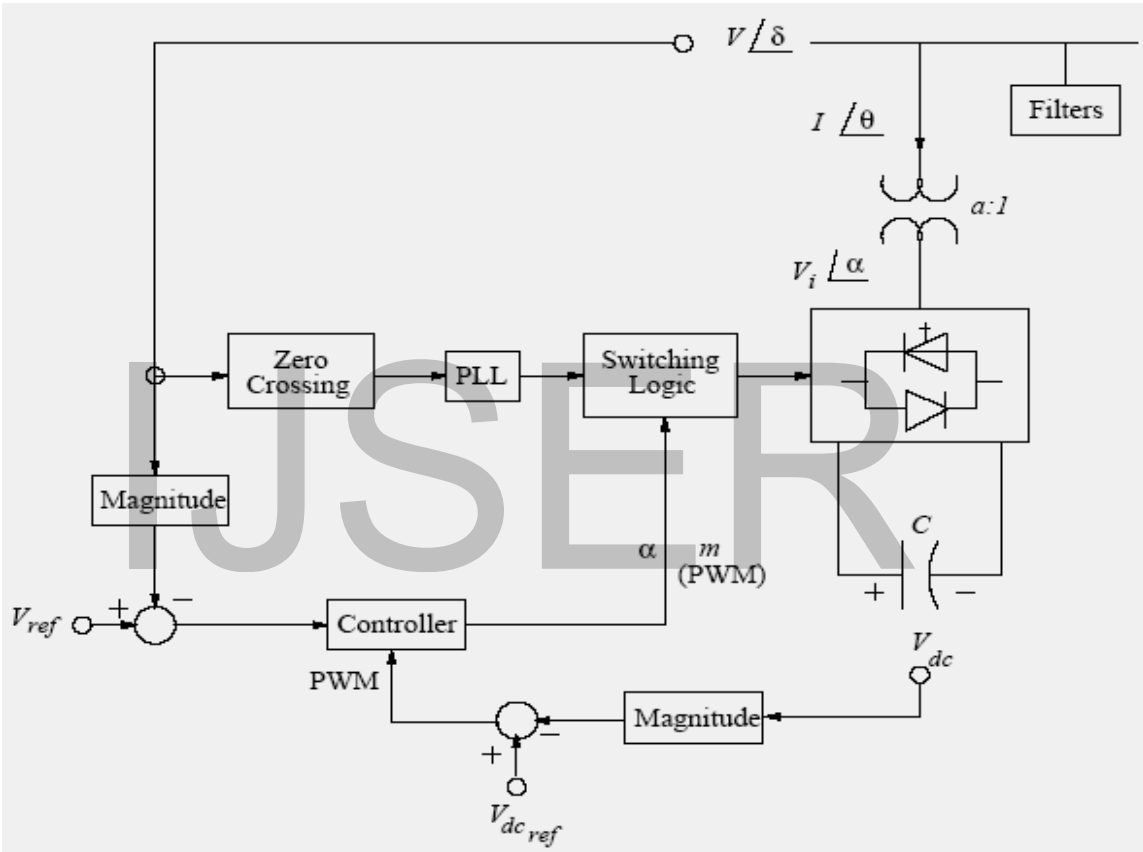

Figure 3.5 Block diagram of a STATCOM with PWM voltage control.

The basic structure of a STATCOM with PWM-based voltage controls is depicted in Figure 3.5, [17, 18]. Eliminating the dc voltage control loop on this figure would yield the basic block diagram of a controller with a typical phase angle control strategy.

The STATCOM models proposed here is based on the power balance equation,

$$P = P_{dc} + P_{loss} \quad (3.3)$$

This basically represents the balance between the controller's ac power P and dc power Pdc under balanced operation at fundamental frequency (these are the basic assumptions on which steady state and transient stability studies of power systems are based). For the models to be accurate, it is important to represent the losses of the controllers (*Ploss*), as discussed below; previously proposed models in [19] do not consider this issue. PWM controls are becoming a more practical option for transmission system applications of VSC-based controllers, due to some recent developments on power electronic switches that do not present the high switching losses of GTOs [20], which have typically restricted the use of this type of control technique to relatively low voltage applications.

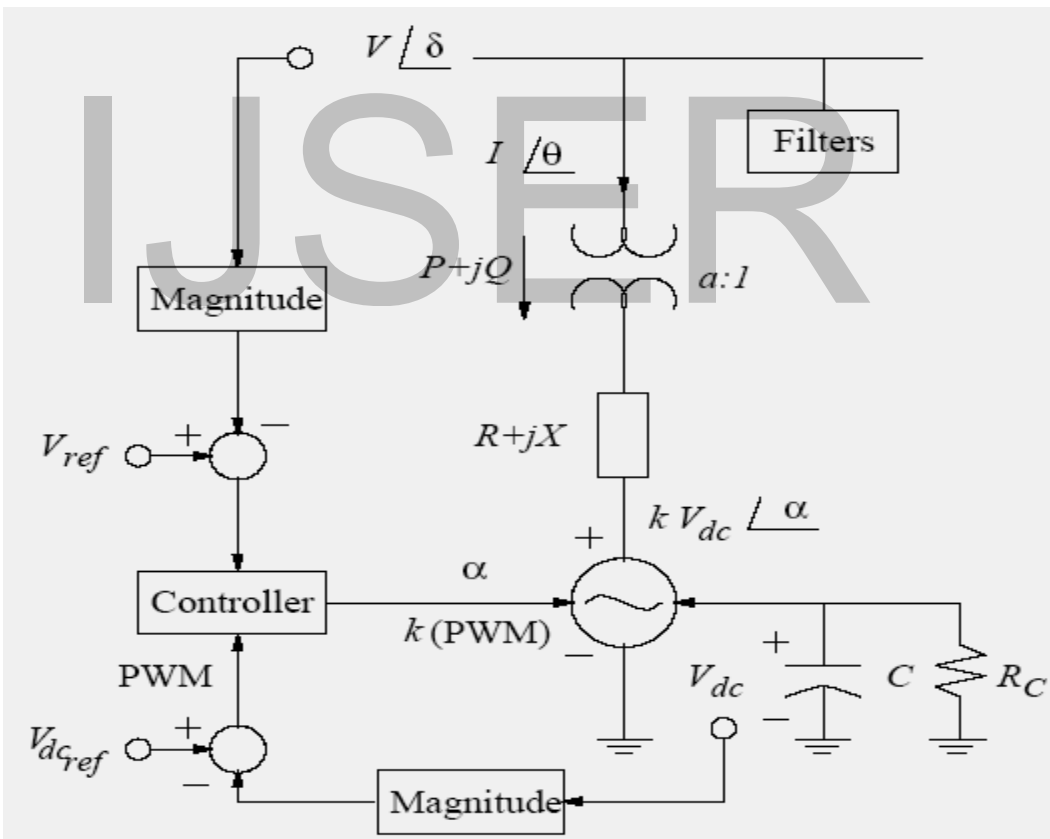

Figure 3.6 Transient stability model of a STATCOM with PWM voltage control.

In PWM controls, switching losses associated with the relatively fast switching of the electronic devices and their snubbers play an important role in the simulation, as these have a direct effect on the charging and discharging of the capacitor, and hence should be

considered in the modeling. The models discussed in this paper assume the use of PWM control techniques, as these allow for developing more general models that can readily be adapted to represent other control techniques (e.g. phase angle control).

4

PSCAD AND ITS COMPONENTS

4.1 Introduction

PSCAD (Power Systems CAD) is a powerful and flexible graphical user interface to the world renowned, EMTDC solution engine. PSCAD enables the user to schematically construct a circuit, run a simulation, analyze the results, and manage the data in a completely integrated, graphical environment. Online plotting functions, controls and meters are also included, so that the user can alter system parameters during a simulation run, and view the results directly. PSCAD comes complete with a library of pre-programmed and tested models, ranging from simple passive elements and control functions, to more complex models, such as electric machines, FACTS devices, transmission lines and cables. If a particular model does not exist, PSCAD provides the flexibility of building custom models, either by assembling those graphically using existing models, or by utilizing an intuitively designed Design Editor.

The following are some common models found in systems studied using PSCAD:

• Resistors, inductors, capacitors
• Mutually coupled windings, such as transformers
• Frequency dependent transmission lines and cables (including the most accurate time domain line model in the world!)
• Current and voltage sources
• Switches and breakers
• Protection and relaying
• Diodes, thyristors and GTOs
• Analog and digital control functions
• AC and DC machines, exciters, governors, stabilizers and inertial models
• Meters and measuring functions
• Generic DC and AC controls
• HVDC, SVC, and other FACTS controllers
• Wind source, turbines and governors

PSCAD, and its simulation engine EMTDC, have enjoyed close to 30 years of development, inspired by ideas and suggestions by its ever strengthening, worldwide user

base. This development philosophy has helped to establish PSCAD as one of the most powerful and intuitive CAD software packages available.

4.2 VOLTAGE SOURSE MODLE

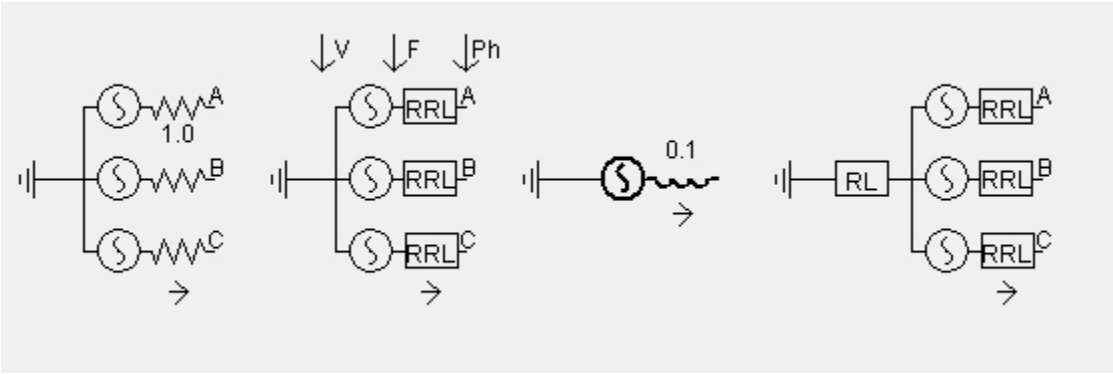

Figure 4.1 Voltage Source Model

As shown in fig.4.1, this component models a 3-phase AC voltage source, with specified source and/or zero-sequence impedance. A zero-sequence impedance branch may be added directly within the component. Also, this component allows you to regulate the bus voltage on a remote location on the network, or the internal phase angle can be regulated to control source output power.

This source may be controlled through either fixed, internal parameters or variable external signals. The external inputs are described as follows:

- **V:** Line-to-Line, RMS Voltage Magnitude [kV]
- **F:** Frequency [Hz]
- **Ph**: Phase angle [°] or [rad]

You can connect a slider to these external inputs for a convenient runtime manual adjustment, or use a control system output for dynamic adjustment.

4.2.1 Data Format for Internal Control

There are two different data formats by which source control parameters may be entered in the **Voltage Source Model.** This is controlled directly by the **Specified Parameters** input with options as described below:

- **Behind Source Impedance**: When this option is selected, the source parameters are entered directly (i.e. **E**, **ϕ** and **f**). Note that **Z** and **θ** depend on the impedance data entry format (Figure 4.2).

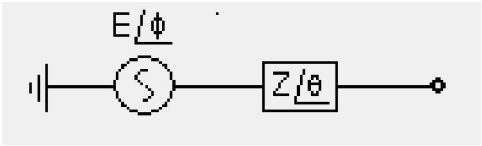

Figure 4.2 Behind Source Impedance Data Format

- **At the Terminal**: When this option is selected, the terminal parameters are entered directly (i.e. **V**, **δ**, **P** and **Q**). From these values, the source model determines the values for **E** and **ϕ**. Note that **Z** and **θ** depend on the impedance data entry format (Figure 4.3).

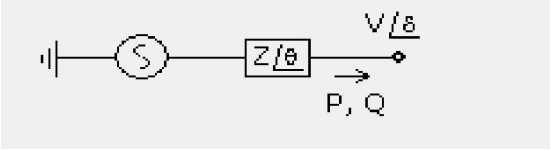

Figure 4.3 At the Terminal Data Format

4.2.2 Source Control Modes

There are three types of source control modes for the Voltage Source Model: Fixed, External and Auto.

- **Fixed Control**: The magnitude, frequency and phase angle of the voltage source are specified internally through **Source Values for Fixed Control** Dialogs. The base voltage and base frequency specified in the **Configuration** Dialog are not meant for controlling.
- **External Control:** This option provides external input connections for specifying magnitude, frequency and phase values. You can connect a slider to this input for a convenient runtime manual adjustment, or use a control system output for dynamic adjustment. The external input signals must be in the following units:
    - **Magnitude**: kV, Line to Line, RMS
    - **Frequency**: Hz
    - **Phase Angle**: Degrees or radians, depending on the **External Phase Input Unit** setting in the Configuration dialog.
- **Auto Control (3-Phase Only):** In this mode, the voltage magnitude can be adjusted automatically so as to regulate the voltage at a selected bus and/or adjust the source phase angle internally to regulate the real power leaving the source. The following diagram shows how the source is connected to allow automatic voltage control (Figure 4.4).

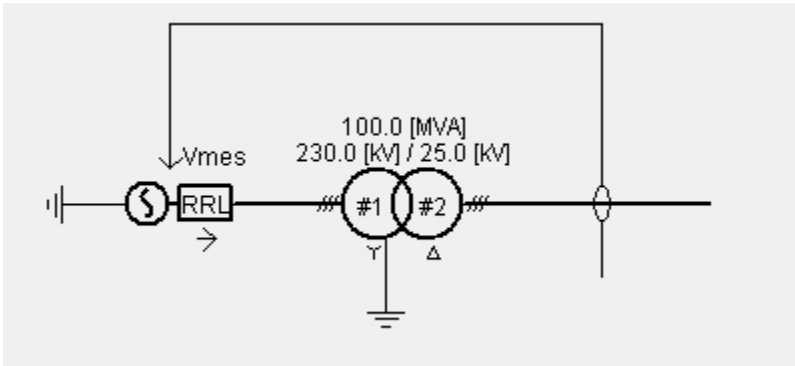

Figure 4.4 Automatic Voltage Control

4.3 Transmission lines

There are two basic ways to construct an overhead line in PSCAD: The first is the original method (referred to as the **Remote Ends** method), which involves a Transmission Line Configuration component with two Overhead Line Interface components, representing the sending and receiving ends of the line. The purpose of the Interface components is to connect the transmission line to the greater electric network (Figure 4.5):

As shown in fig. 4.6, the second and more recently introduced method is to use the **Direct Connection** method, where the interfaces and the corridor properties are housed

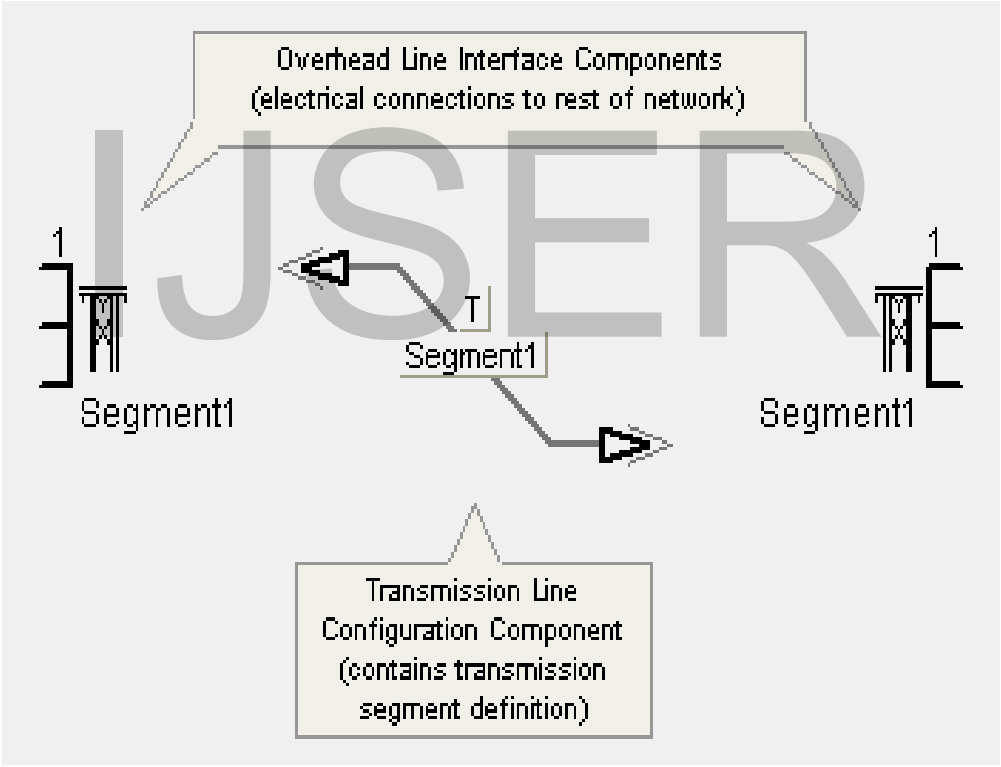

Figure 4.5 An Overhead Transmission Line (Remote Ends Method)

within a single component. This method however, can only be used for 1-phase, 3-phase or 6-phase, single-line systems, where the maximum number of conductors is 6

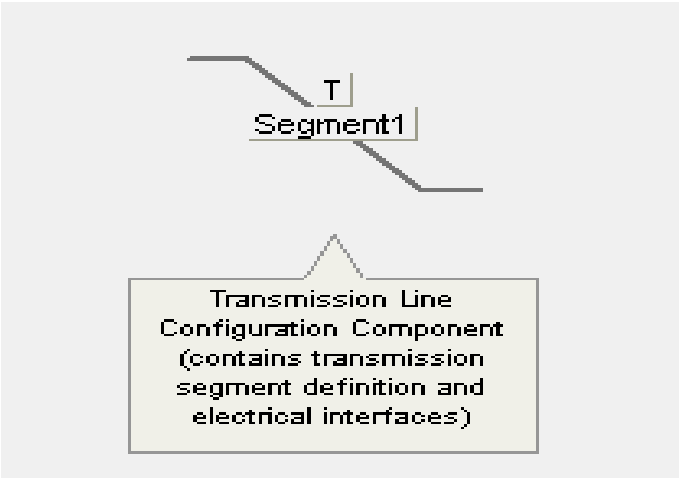

Figure 4.6 An Overhead Transmission Line (Direct Connection Method)

4.4 On-Line Frequency Scanner (FFT)

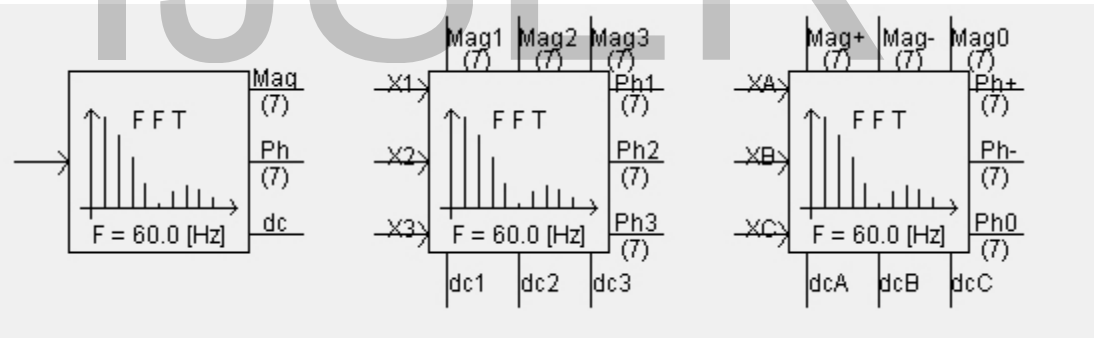

Figure 4.7 On-Line Frequency Scanner

This is an online Fast Fourier Transform (FFT), which can determine the harmonic magnitude and phase of the input signal as a function of time. The input signals first sampled before they are decomposed into harmonic constituents.

Options are provided to use one, two or three inputs. In the case of three inputs, the component can provide output in the form of sequence components.

The user may select one of the following three FFT block types:

- **1-phase**: This is a standard 1-phase FFT. The input is processed to provide the magnitudes **Mag** and phase angle **Ph** of the fundamental frequency and its harmonics (including the DC component **dc**).
- **2-phase**: This is nothing more than two 1-phase FFTs in a single block, in order to keep things compact and organized.
- **3-phase**: As above, is merely three 1-phase FFTs combined in one block.
- **+/-/0 seq**: This takes a 3-phase input **XA**, **XB**, **XC** and calculates the FFT preliminary output through a sequencer, which outputs positive (+), negative (-), and zero-sequence magnitude and phase components of the fundamental, and each harmonic. The DC components of each phase are also output.

The sequence components are computed based on the simple transformation equation:

$$\begin{bmatrix} V_a \\ V_b \\ V_c \end{bmatrix} = \frac{1}{3} \cdot \begin{bmatrix} 1 & 1 & 1 \\ 1 & 1\angle 120^\circ & 1\angle -120^\circ \\ 1 & 1\angle -120^\circ & 1\angle 120^\circ \end{bmatrix} \cdot \begin{bmatrix} V_0 \\ V_+ \\ V_- \end{bmatrix}$$

NOTE: This component is meant for processing signals consisting of power frequencies (typically 50 Hz and 60 Hz) and its harmonics and therefore, is not well tested for higher frequencies.

4.5 Sequence Filter

This Sequence Filter calculates the magnitudes and phase angles of sequence components, when the magnitudes and phase angles of the phase quantities are given (Figure 4.8).

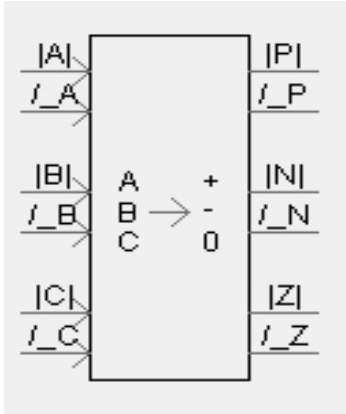

Figure 4.8 Sequence Filter

4.6 Mho Circle

The Mho Circle component is classified as an 'Impedance Zone Element', which checks whether or not a point described by inputs **R** and **X**, lies inside a specified region on the impedance plane. **R** and **X** represent the resistive and reactive parts of the monitored impedance, and may be input in per-unit or ohms. Please note however, that the units of the component input parameters should match that of the **R** and **X** inputs. The component produces an output '1' if the point defined by **R** and **X** is inside the specified region, otherwise the output will be '0'.

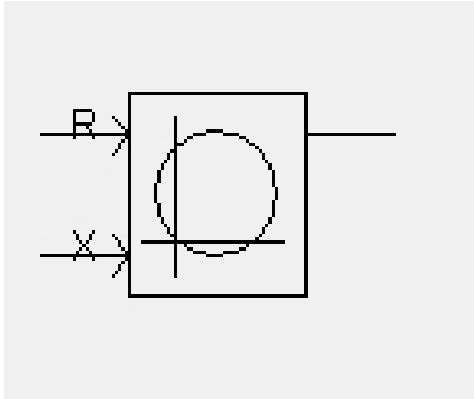

Figure 4.9 Mho Circle

4.7 Line to Ground Impedance

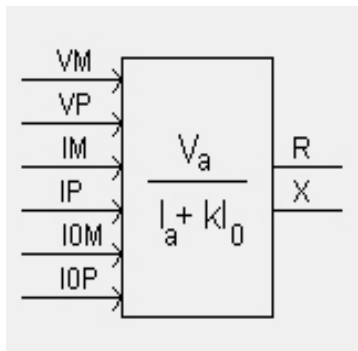

Figure 4.10 Line to Ground Impedance

This component computes the line-to-ground impedance as seen by a ground impedance relay (Figure 4.10). The output impedance is in rectangular format (**R** and **X**), and is optimized for use with the Trip Polygon, Distance Relay - Apple Characteristics, Distance Relay - Lens Characteristics or the Mho Circle trip devices as shown below(Figure 4.11):

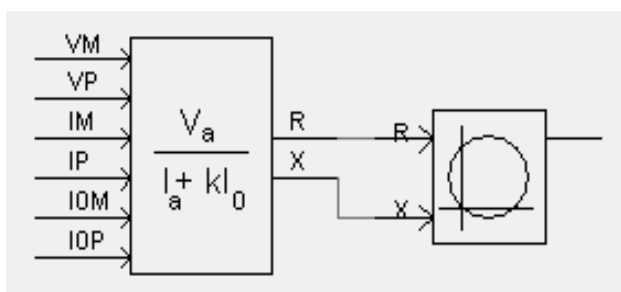

Figure 4.11 Output of the Component

The on-line ground impedance is calculated as follows:

$$Z_{LG} = \frac{V_{phase}}{I_{phase} + k \cdot I_0}$$

Where,

V_{phase} = phase voltage

I_{phase} = phase current

$$I_0 = \frac{1}{3}(I_A + I_B + I_C)$$

$$k = \frac{Z_0 - Z_1}{Z_1}$$

Zo= Zero-sequence impedance as seen from the location of the relay to the end of the protected zone

Z_1= Positive-sequence impedance as seen from the location of the relay to the end of the protected zone

4.8 Line to Line Impedance

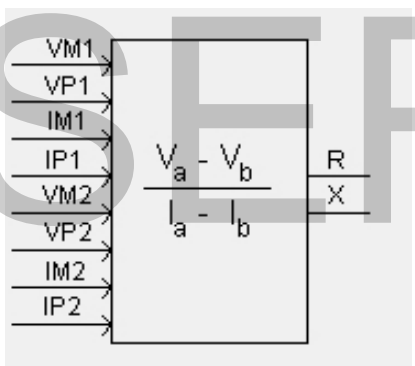

Figure 4.12 Line to Line Impedance

As shown in fig 4.12, this component computes the line-to-line impedance as seen by a ground impedance relay. The output impedance is in rectangular format (R and X), and is optimized for use with the Trip Polygon, Distance Relay - Apple Characteristics, Distance Relay - Lens Characteristics or the Mho Circle trip devices as shown below(Figure 4.13):

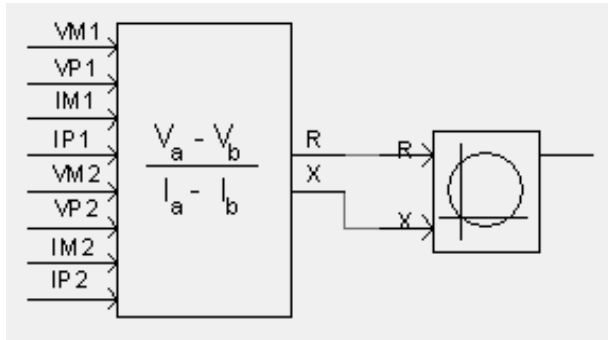

Figure 4.13 Output of the component

The on-line ground impedance is calculated as follows:

Where,

V_{phase} = phase voltage

I_{phase} = phase current

4.9 CSMF (CONTINUOUS SYSTEM MODEL FUNCTIONS)

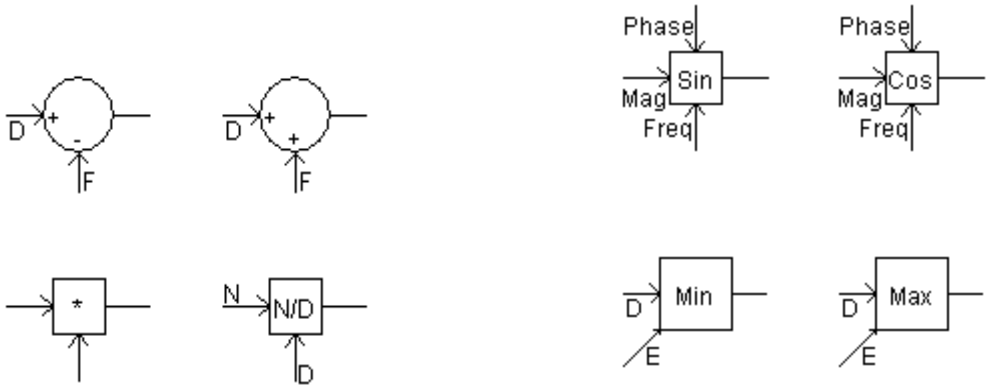

Figure 4.14 CSMF Component

In addition to various arithmetic and logical operators, PSCAD possesses the ability of perform a limited set of mathematical functions as in fig.4.14, mathematical expression

evaluation is used mostly in the computations segment, while arithmetic and logical operators are used throughout the entire component definition.

4.10 BREAKER

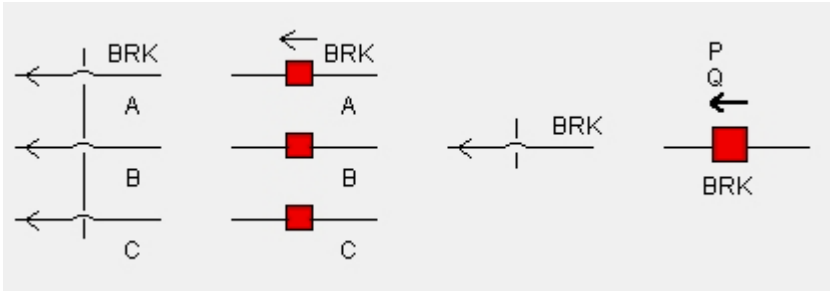

Figure 4.15. (a) Single line view of high voltage breaker and (b) single line view of low voltage breaker.
(c) Three phase view of high voltage breaker and (d) three phase view of low voltage breaker.

The component shown in fig.4.15 simulates of three-phase circuit breaker operation. The ON (closed) and OFF (open) resistance of the breaker must be specified along with its initial state. This component is controlled through a named input signal (default is **BRK**), where the breaker logic is:

- 0 = ON (closed)
- 1 = OFF (open)

Three-Phase Breaker operation is virtually identical to that described for the Single-Phase Breaker. The breaker control can be configured automatically by using the Timed Breaker Logic component, or the Sequencer components. The breaker may also be controlled manually through the use of on-line controls, or through a more elaborate control scheme.

4.11 Control Panels

A Control Panel is a special component used for accommodating Control or Meter Interfaces and can be placed anywhere in a project page. Once a Control Panel has been added, you may then proceed to add as many Control or Meter Interfaces to it as you wish.

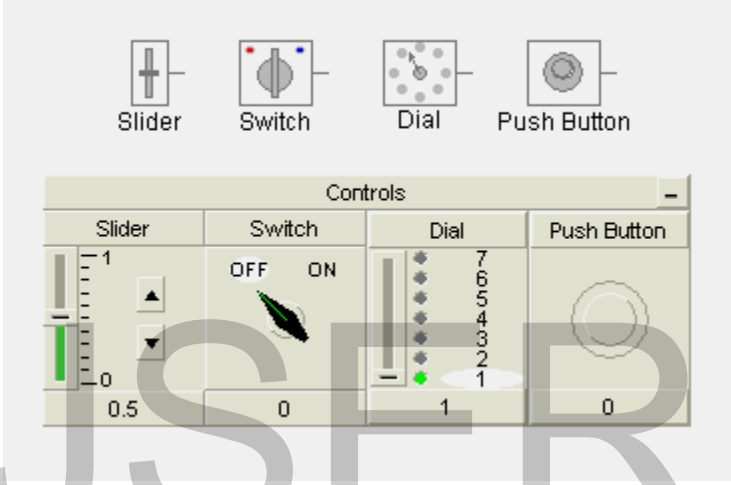

Figure 4.16 Control Components

Of course, each type of control component will have a different control interface when added to a control panel. Figure 4.16, shows the available control components and their corresponding control interfaces.

5

ADAPTIVE RELAYING

5.1 INTRODUCTION

Distribution power system inevitably experiences faults and consequently, changes in its operation condition. A protection system is, in general, set to be adequate a certain operation condition. Therefore, if the operation condition changes, incorrect operation of convention protection relays can result in a sequence of trips, which may cascade into a blackout. With further deregulation of the power industry and the introduction of the FACTS facilities, power system will become more complex, and their configuration and power flow will become more dynamically changeable. Then it will be more difficult for protective relays to identify the fault situation precisely. To avoid protection relays mal-operation and ensure continuing optimal relay operation, the concepts of adaptive protection, which automatically adjust functions to match power system conditions, have been proposed [21-22]. The superior performance of the adaptive protective relays is achieved by supplying the device with additional information, which can be derived by the distributed structure of adaptive protection system with a wide area communication network.

5.2 Adaptive Protection Principles

Protection system performance considerations are of paramount importance in discussing the operational security of a power network. It has been documented that a majority of major system disturbances (brown-outs, black-outs) are a result of sequential operation of protective equipment in an unanticipated manner. The normal practice is to set the protection systems based upon certain assumed conditions in the power network. As is often the case, the assumed conditions do not always obtain in practice, and indeed very often the networks reach a state which was never anticipated in the planning studies. Add to this the fact that protection systems may go out of calibration, wear out, or develop hidden failures. Considering the very large number of protection systems which actually exist on the power network, it is then not surprising that occasionally unanticipated trips of power equipment are caused by the protection system. When such trips occur while the power system is stressed, major disruption of the power system is the result. It is of course not possible to guarantee that there will never be mis-operations of the protection systems.

However, one cause of mis-operations, viz. the protection systems not being suited to the power system state, can be corrected through the recently introduced concept of 'Adaptive Protection' [2, 3]. Adaptive Protection is defined as follows: "***Adaptive protection is a protection philosophy which permits and seeks to make adjustments in various protection functions automatically in order to make them more attuned to prevailing power system conditions.***" It is to be noted that the idea of adapting the protection to changing system conditions can not be applied to a protections. Primary protection systems by and large are required to operate so quickly that unless the adaptive feature is in-built in the relay, there would not be enough time to make adaptive changes to the relays. It is also not desirable to alter some protections. Typical examples are unit protection systems, where there is usually no possibility of mis-operation as long as the protection equipment functions normally. Since communication links to other entities is one of the principal features of adaptive protections, it is natural that adaptive protections have their best applications in functions that are slower responding that the primary protections. Examples of such functions are local and remote backup protections, out-of-step relaying, loss-of-field relaying, load shedding, etc. Many of the remedial action schemes are also in this category, and can benefit from adaptive protection applications.

5.3 ADAPTIVE DIGITAL DISTANCE PROTECTION

In a digital relaying scheme, voltage and current samples are taken at the relaying point and used to compute the apparent impedance of the line seen by the relay. If the impedance is inside a predetermined boundary, the decision is made to disconnect or trip the line. This system works well for a zero-resistance fault situation. The voltage and current samples are taken and the apparent impedance is determined to be the impedance of the line from the relaying point to the fault. If this impedance is less than the expected line impedance, the line is tripped. The problem occurs in the case of non-zero resistance fault situations. The voltage that is sampled is the sum of the line voltage and the fault voltage. The voltage drop across the fault is a function of the current from the relay terminal and the current from the remote-end terminal. The current contribution from the remote end cannot be measured at the relaying point. It is possible to measure the remote-end current and send

it back to the relay end bye a high-speed communication channel; however this has not been very practical. Traditional system only incorporated a margin of error to account for the unknown current in order to keep the relay from overreaching. This resulted in a certain amount of the far end not being protected by the first zone of protection. In order to protect the line properly, the amount of unprotected line must be minimized. An alternative method is to determine the apparent line impedance as a function of known parameters such as positive and zero sequence impedance components, terminal voltage and the known fault resistance. Computer simulation may then be performed to determine an ideal trip boundary, for several fault resistance values. Muliti-terminal lines can be protected in a similar manner as two terminals lines. The difference is that the apparent impedance as seen at a relay location is not just a function of the parameters of one line and two terminals, but a function of two or more lines and three or more terminals. These line and terminal parameters can be determined in advance. Computer simulation may then be used to determine ideal trip boundaries for several fault resistances in different parts of the line. These boundaries do change with changing system conditions. Thus, the adaptive approach of measuring system conditions and updating the ideal trip boundaries can be very useful. The protection algorithm will measure the voltage and current samples at the relay location. The apparent impedance is then calculated and the computer refers to the most recent trip boundaries and determines occurrence of a fault and its locations. Relays should adapt to ever changing system conditions, whether it's a two-terminal or multi-terminal line. By using a computer or microprocessor based detection scheme, the reliability and system stability is greatly improved. During the normal operation of a system, unexpected events can affect the overall performance of the system. If an abnormal condition should arise, such as frequency deviations, the protective devices may not be prepared to handle the obscurity of parameter changes due to the pre-set inputs. A solution is to use real-time data to reset any relay input settings. Therefore, it is possible to develop control rules for automatically adapting to the system changes. Components are added to the control law aimed at unpredictable factors that affect the states of the protected line. This improves the effectiveness of a distance protection scheme. Power system frequency deviations are expected within certain limits.

Two undesirable consequences of frequency excursions in digital distance protection

are the influence on sampling period and the computed value of the reactance. To translate the input signals properly, the digital signals after sampling should be sinusoidal sequences with a period of N when line currents or voltages are sinusoidal. In the case of frequency deviations, the sample signals will not belong to a 50 or 60 Hz signal. As a result, the computations will be in error.

5.4 ADAPTIVE SETTING

The performance of the proposed method can be further enhanced if setting can be made adaptive to the prevailing power system conditions. This would mean that the system condition should be monitored and new settings should be calculated in response to any changes in the operating conditions. The new settings are then communicated to the relays. The relay settings are, therefore, always attuned to the prevailing system conditions. This adaptive setting technique is described in this section.

5.4.1 ADAPTIVE PROTECTION SYSTEM

Figure5.1 shows the functional block diagram of an adaptive distribution protection scheme using directional over current and ground fault relays. Computer based over current relays are installed on each line. The relays monitor and analyze voltages and currents, and send the information to the substation control computer at regular intervals. The substation control computer interfaces the relays with the central control computer. The relays also monitor and provide the status of isolators and circuit breakers to the station control computer. The station control computers transfer the information received from the relays to the central control computer at pre-specified intervals. The central control computer estimates the system states, takes the decisions if the settings are to be changed or not, and computes new settings, if it is deemed necessary. The decisions and the new settings are conveyed to the relays via the station control computers.

5.4.2 THE TOPOLOGY DETECTION TECHNIQUE

Since the proposed adaptive protection scheme has substation control computers, in addition to a central control computer, it was decided that the topology of each substation be determined by its substation control computer. It was also decided that the system-wide topology be then determined by the central computer using the information generated by the substation control computers.

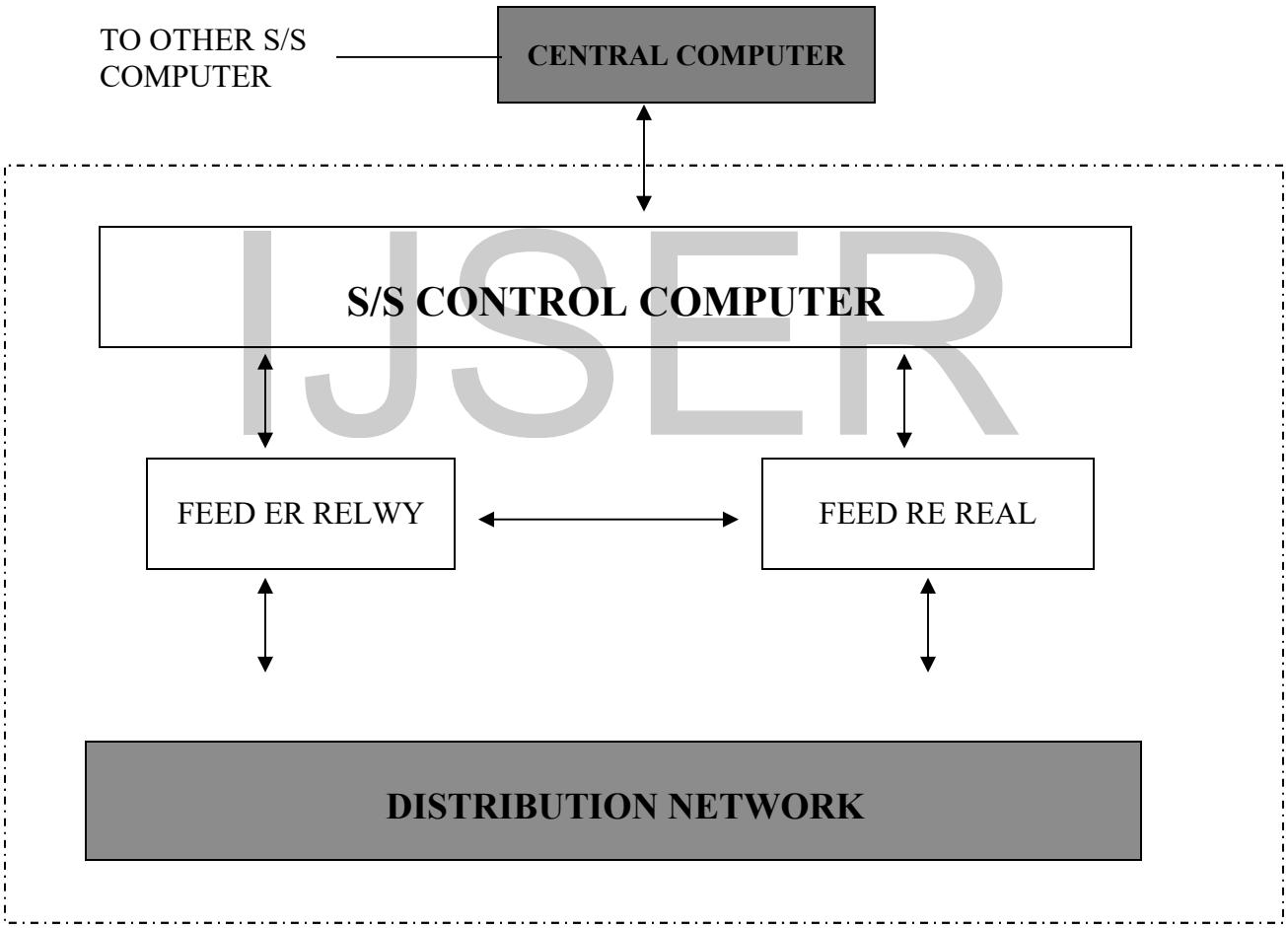

Figure 5.1 Block diagram of an adaptive distribution protection system.

5.4.2.1 BASIC FUNCTIONS

The topology analysis technique performs the following basic functions:

1. Develop the logic to process the status of circuit breakers and Isolators.
2. Identify the changes of the status of the circuit breakers, isolators and line flows when a switch is opened or closed.
3. Subdivide a substation into two or more nodes if opening a tie circuit breaker separates parts of the substation.
4. Subdivide the distribution network to find the line node connectivity.
5. Provide the Line-Node connectivity data, as well as load and generation data, to a load flow program.

During initialization, the technique reads the input data that are described in a later section. When the status of a circuit breaker or an isolator changes, the substation control computer analyzes the substation configuration to determine if it has changed or not. If it has, the computer updates the configuration and sends the updated configuration along with the information on line flows, load and generation to the central control computer. The central control computer processes the information and determines the new line-node connectivity's of the system and updates the input to the load flow program.

6

SIMULATION OF DISTANCE RELAY

6.1 Introduction

DISTANCE relay can malfunction due to the difference between real impedance and the impedance that relay sees in proportion to the magnitude of ground fault impedance. These mal-operations easily occur with high fault impedance, and large deviation of power factor and magnitude of load. The object of this paper is to minimize the mal-operation of distance relay by modifying optimally the protection zones for the ground faults according to the load deviation and system condition. Since distance relay uses only voltage and current at the setting point to see the impedance, the characteristics of impedance that distance relay calculates are changed when the magnitude of the load current or when characteristics of load are varied. These changes of impedance characteristics make a difference between the impedance that the distance relay sees and the real one at the ground fault with fault impedance. Generally, a digital distance relay for transmission line protection will operate if the measured impedance falls into a pre-set range after comparing the pre-set impedance set by the operator and the impedance which is calculated from the measured voltages and currents at the relay-installed point. If the setting would be configured based only on the power system conditions at the time when the setting was provided, however, the ground fault detection unit in a distance relay tends to mal-operate because of its inherent characteristics, i.e.; the impedance seen by the relay would have some deviations, in many times, from the actual fault impedance due to the pattern of the faults and power system conditions just before the fault.

6.2 OPERATING RANGE OF THE DISTANCE RELAY

Generally, a digital distance relay for transmission line protection will operate if the measured impedance falls into a pre-set range after comparison between impedance, calculated from the measured voltages and currents at relay installed point and pre-set impedance set by the operator. However, ground fault detection unit in a distance relay tends to mal-operate because of its inherent characteristics, if its setting would be configured only based on the power system conditions at the time when the setting was provided. The reason for this is that the impedance seen by the relay would have some deviations, in many times,

from the actual fault impedance due to the pattern of the faults and power system conditions just before the fault.

6.3 EMTP/PSCAD MODELS

MODELS are a symbolic language interpreter for the EMTP/PSCAD that has recently gained popularity for the electromagnetic transient's phenomenon modeling. MODELS provide the monitoring and controllability of power system as well as some other algebraic and relational operations for programming. MODELS approaches to model the power system by describing the physical constants and/or the subsystems functionally for target systems. With some compromised functions, it is also called a new TACS, which is a well known subsystem available within the EMTP/PSCAD. Some control statement features of a programming language are added in addition to the TACS for more controllability. They are repetition, conditional path selection, and user defined functions [23]. While having such strong features for programming in simulation tasks, the MODELS, however, has a drawback in that memory allocation is limited in size for data arrays. At the preprocessing stages, the anti-aliasing low-pass filter and the dc-offset removal filter are implemented to produce the voltage and the current values for the extraction of the fundamental frequency component, which in turn is used for the impedance calculation. For the fundamental frequency signals, Fourier Transform and Walsh Function methods are used in the simulation. In order to confirm the impedance convergence, the algorithm is tested for each fault type and distance. The system diagram for the simulation is shown in (Figure 6.1).

6.4 IMPLIMENTATION OF DISTANCE RELAYING BY MODELS

A distance relaying system implemented in a microprocessor is widely used for protecting transmission systems principally because of high reliability and very little maintenance.

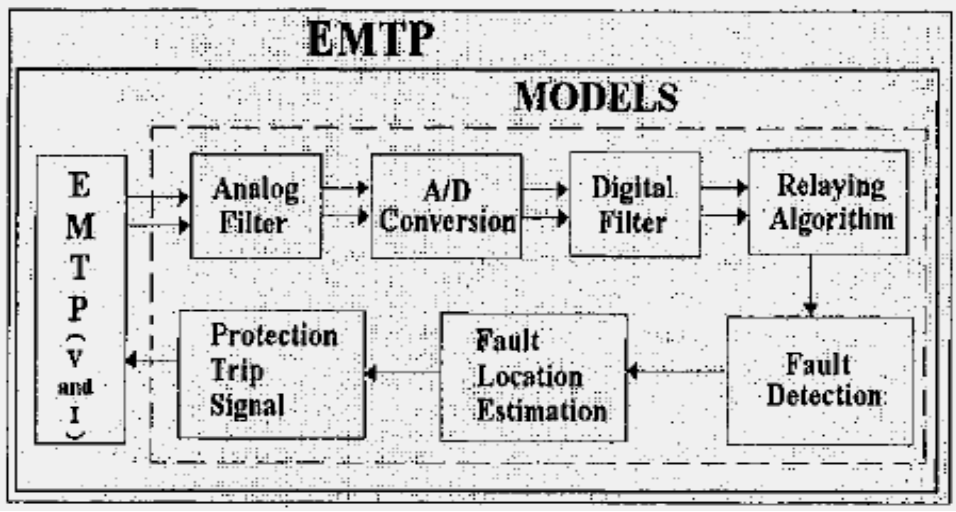

Figure 6.1 Overall Block Diagram of Simulation using Models

Its fast operation and independence of the capacity of the power system are responsible for its popularity. Distance relaying scheme makes use of the transient voltage and current values passed through the **CT** (current transformer) and **PT** (potential transformer) for the calculation of the impedance. The distance relaying methods rely on their estimation of fault distance based upon the partial values and their convergence: there has been a lot of research done in this field. Among many approaches considered, the transmission line protection based on the fundamental frequency signals is widely used; the work presented herein is concerned with an alternative implementation of the latter approach with a viewpoint of fast and accurate extraction of the fundamental components from the measured voltage and current signals. When a fault occurs, the transient voltage and current values are mainly composed of the high frequency and exponentially decaying dc-offset components. For the reliable estimation of the fault distance, the fundamental component needs to be extracted via various digital signal processing algorithms. In this section, we have implemented the anti-aliasing low-pass filters and the dc-offset removal filter using the MODELS.

6.4.1 ANTI ALIASING LOW-PASS FILTER

In order to meet the sampling theory, the sampling rate should be twice the maximum frequency in the analog signal. Sampling with a lower sampling rate results in errors due to the aliasing effects in the discrete time signals. The anti-aliasing filter which in practice is an analog filter is used to minimize such aliasing effect as well as attenuate the high frequency components, For the purposes of removing the unwanted components, simulation of an analog second order Butterworth low-pass filter are employed [23]. The specifications fur the filter are that the pass band cutoff frequency is 60 Hz, the stop-band cutoff frequency 360 **Hz,** stop-band attenuation **28** dB and the sampling frequency used is **1.8** kHz **(30** samples/cycle and is well above the requisite Nyquist rate of 720 **Hz).**

6.4.2 DC-OFFSET REMOVAL FILTER

When a fault occurs, the abnormal components of the voltage and the current are due to the high frequency and the dc-offset components. The aforementioned anti-aliasing filtering removes the majority of the high frequency components but not the dc-offset components; the next step is to apply the dc-offset removal filter. When a fault occurs, the distortion measured in the voltage consists mostly of the high frequency components while the measured current values are affected by the exponentially decaying dc-offset component. It should be mentioned that in comparison to voltage signals, current signals are more affected by dc offset. They experience maximum dc-offset for voltage zero faults and minimum for voltage maximum faults. For an algorithm using the fundamental component, the dc component should be removed for correct results. The approach adopted here is based on using all the three phase components and removing the dc components accordingly. The aforementioned anti-aliasing low-pass and the dc-offset removal filters are implemented in a single EMTP/PSCAD file and the simplicity of controlling the power systems and the protective digital relaying systems is hence ensured.

6.4.3 DIGITAL FILTER FOR FUNDAMENTAL FREQUENCY COMPONENT EXTRUCTION

There are three approaches used in digital transmission line protection algorithms. These approaches depend on the form of the final input signal used to make the relaying decision. The technique employed herein is the widely accepted method that uses the fundamental frequency signal. The voltage and the current values from the extracted fundamental signals are used to calculate the impedance from the system to the point where the fault occurs. In this respect, there have been proposed many algorithms for the fundamental component extraction; Fourier Transform, Walsh Function, Harr Transform, and block pulse functions are the orthogonal functions that have been used for this purpose [23]**.** We used the Fourier Transform and the Walsh Function methods which are implemented with MODELS structure.

6.5 CASE OF STUDY

Now that the theory and the structure of the interactive relay test system are prescribed, the following begins with an example of a power transmission line of fault simulation to test relay operation. Fig. 6.2 depicts the 345 kV, 60 Hz simulated system one-line diagram. Fig. 6.3 is the simulated system model by PSCAD. The other related parameters of the simulated system are shown in Appendix (A); Zone 1 is setting 85% of the total line length. This example uses MHO type to explain the relay operation performance. The mimic filters with time constant 2 cycles, the phase difference between ES and ER is 15 degrees, and the sampling frequency is 1920 Hz. The transmission line length is 100 km. The phasor is estimated by full-cycle DFT.

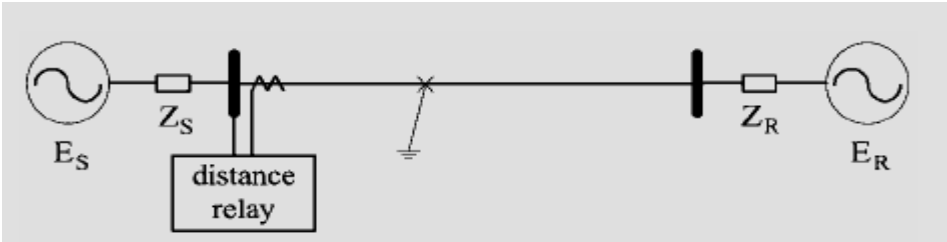

Figure 6.2 One-line diagram of simulation system

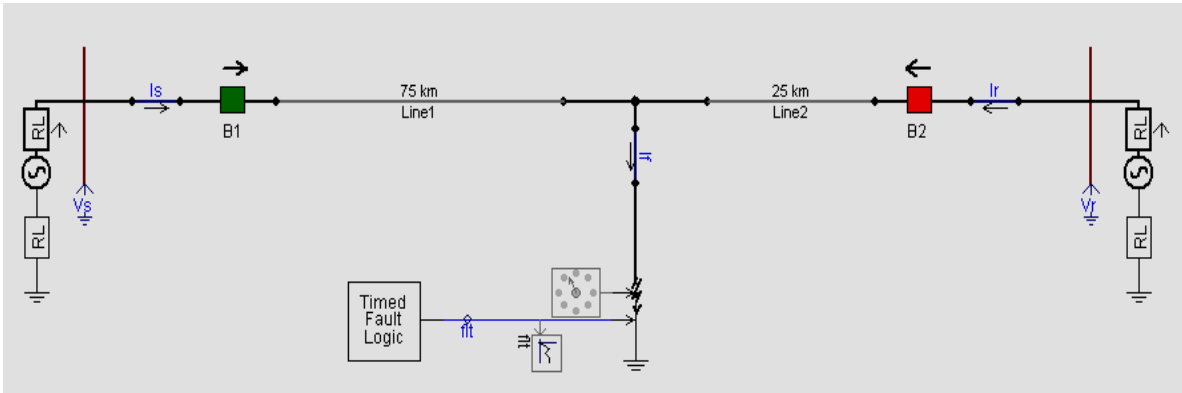

Figure 6.3 Simulated system models by PSCAD

6.5.1 PROTECTION RELAY REPRESENTATION

The relay under study, shown in Fig.6.2 is modeled in the simulator as six Mho Distance elements with a positive sequence voltage polarization, three elements for phase-phase loops and three elements for the phase-ground loops. Fig.6.4 shows the modeling of one element of the relay. The relay calculates the apparent impedances of the fault loops which then are compared against reactance and resistance limits determined by the relay settings as illustrated in the logic diagram of Fig. 5. In this sense, the following is the apparent impedance for different fault loops [24].

$$Z_X = V_X / I_X.$$

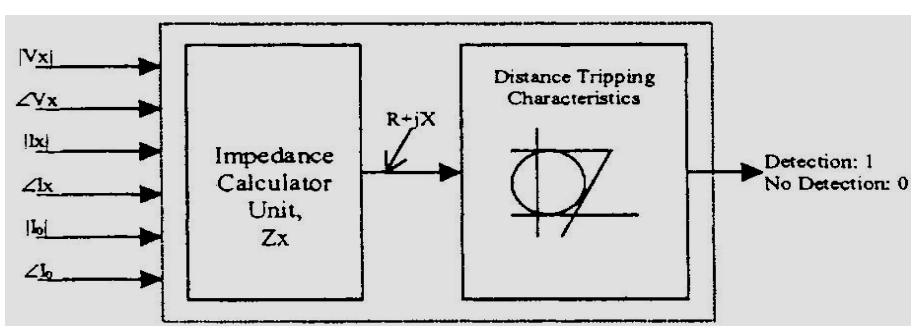

Figure 6.4 One distance element block diagram as modeled in the simulator.

a) for three-phase-faults:

Vx line-to-ground voltage (V_{AG}, V_{BG}, V_{CG});

Ix line current (I_A, I_B, I_C);

b) for phase-phase faults:

Vx line-to-line voltage (V_{AB}, V_{BC}, V_{CA});

Ix delta line current (I_{AB}, I_{BC}, I_{CA});

c) for phase-to-ground faults:

Vx line-to-ground voltage (V_{AG}, V_{BG}, V_{CG});

Ix compensated current (I_A+ KoIo, Ib+ KoIo, Ic+ KoIo);

Io zero sequence current;

Ko zero sequence compensation factor (= (Z_{0L}- Z_{1L})/ Z_{1L});

Z_{0L} and Z_{1L} zero and positive sequence line impedances.

The tripping characteristic for the Mho relay with a positive-sequence voltage polarization can be expressed by a two-input comparator with the phasors S_1 and S_2 as follows:

$$S_1 = V_X - Z_r I_X$$

$$S_2 = V_{1r\,mem}$$

Where

Zr impedance setting reach;

S1 operating signal;

S2 restraining signal;

$V_{1r\,mem}$ positive sequence memory voltage.

6.6 PSCAD VIEW OF DISTANCE RELAY

In this section the PSCAD view of the distance relay is reviewed that is consists of two parts (blocks) as it is shown in figure 6.5, here both parts are summarized as following;

1) Signal processing page; the measured voltage (Vs) and current (Is) of the output of the PT and CT at the relay point are enter this part as inputs as it shown in figure 6.5.
2) Protection scheme page; the outputs of the first block will be entered this block as inputs parameters (figure 6.5).

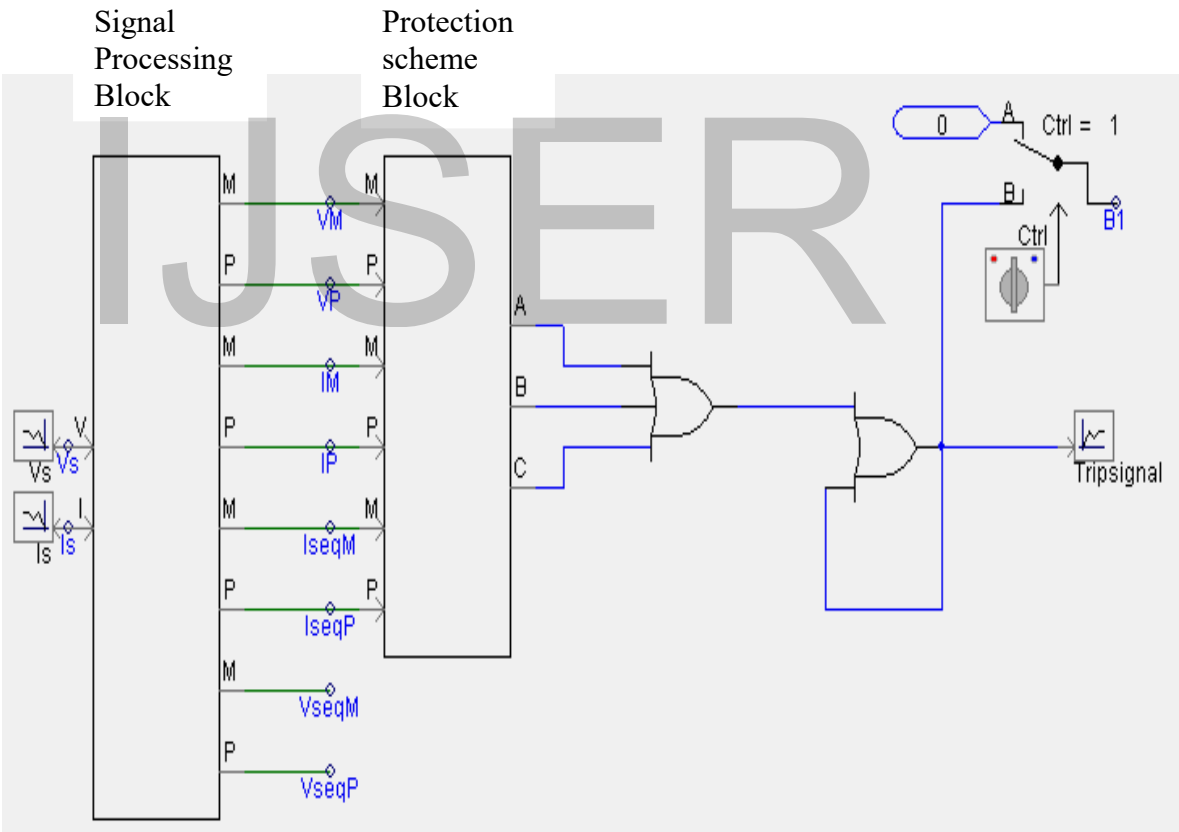

Figure 6.5 PSCAD view of distance relay procedure

6.6.1 SIGNAL PROCESSING PAGE

The including components of this part are shown in figure 6.6, which the measured voltage and current of the relay point are the input parameters of this part, during this process first; the input is processed to provide the magnitudes **Mag** and phase angle **Ph** of the fundamental frequency and its harmonics (including the DC component **dc**).Then, Sequence Filter calculates the magnitudes and phase angles of sequence components, when the magnitudes and phase angles of the phase quantities are given. So the final outputs of this block will be transferred to the protection scheme block as inputs parameters (figure 6.5).

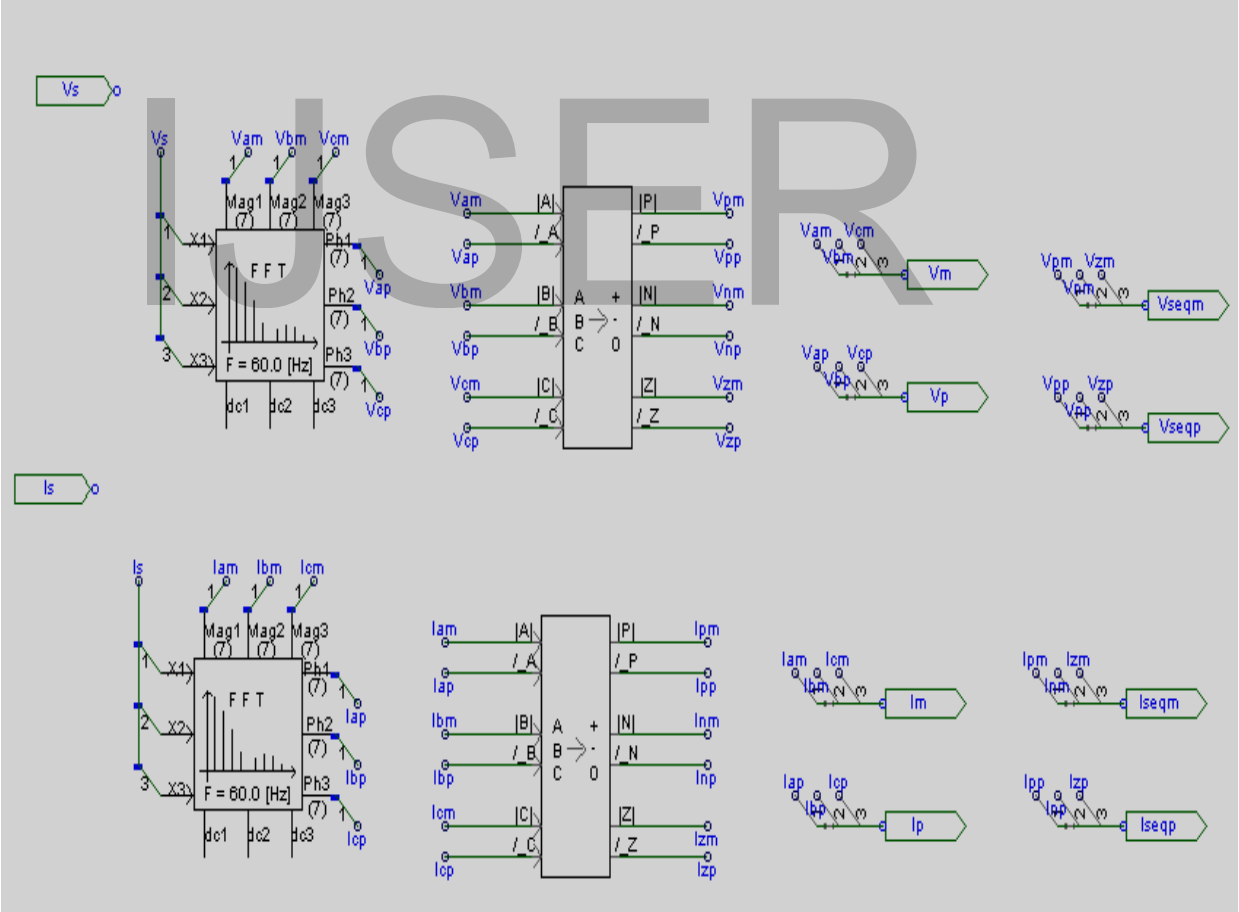

Figure 6.6 Components of the signal processing page

6.6.2 PROTECTION SCHEME PAGE

In this part six Mho Distance elements with a positive sequence voltage polarization, three elements for phase-phase loops and three elements for the phase-ground loops are modeled. The relay calculates the apparent impedances of the fault loops which then are compared against reactance and resistance limits determined by the relay settings as illustrated in the logic diagram of Fig. 6.7.

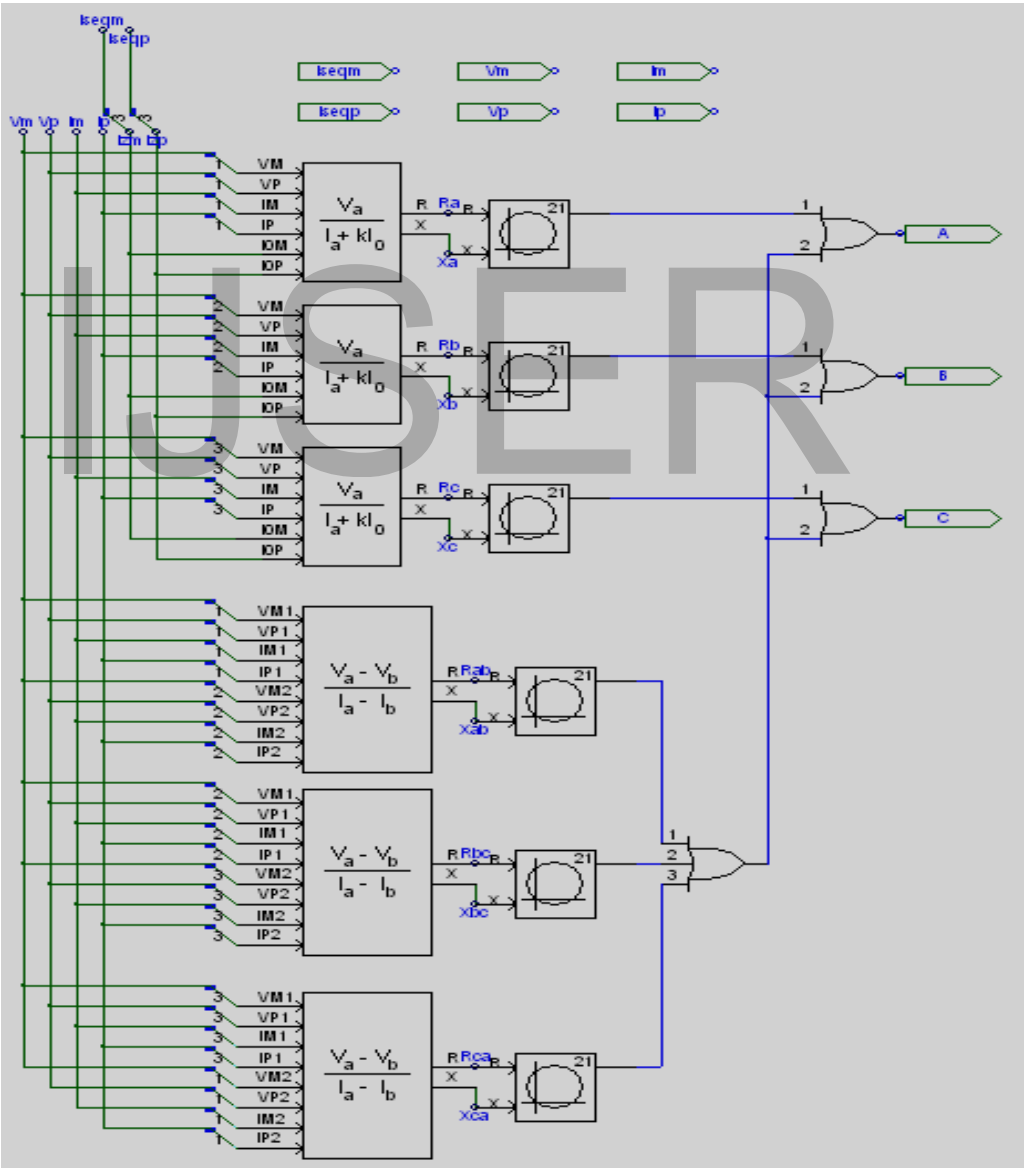

Figure 6.7 Protection Scheme Block

6.7 PHASE 'A' TO GROUND FAULT

First, In order to prove digital distance relay of performance, an internal fault is applied to the power system with the phase A to ground fault, the fault resistance is 1 ohm, the fault angle is zero degree (refer to S terminal of phase A voltages waveform), and the fault is located 75 kilometers form S terminal.

The apparent impedance trajectories of the system with the distance relay Mho characteristic for the fault located in the region of the protected zone and also the wave forms of voltages, currents, fault current and the trip signal of the relay are shown in figures 6.4 and 6.5.

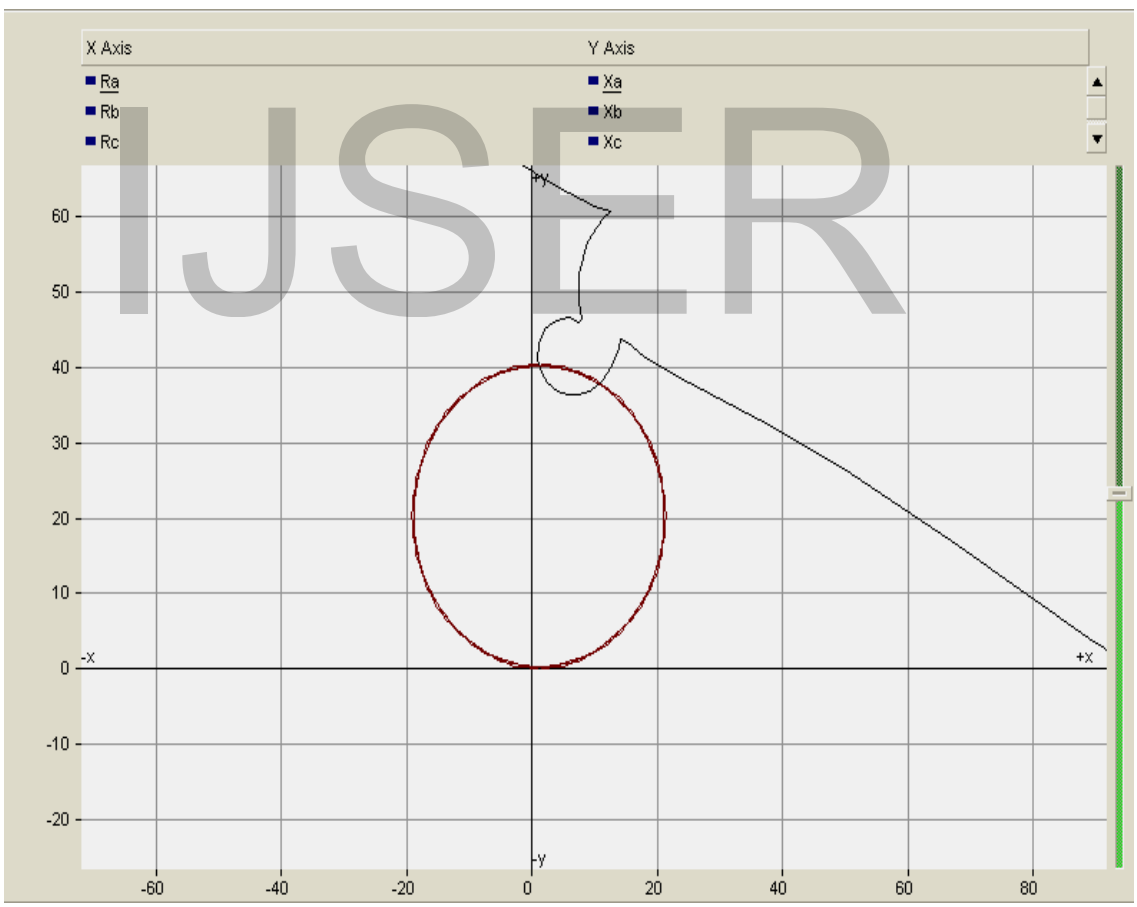

Figure 6.4 Apparent impedance seen by the single to ground unit

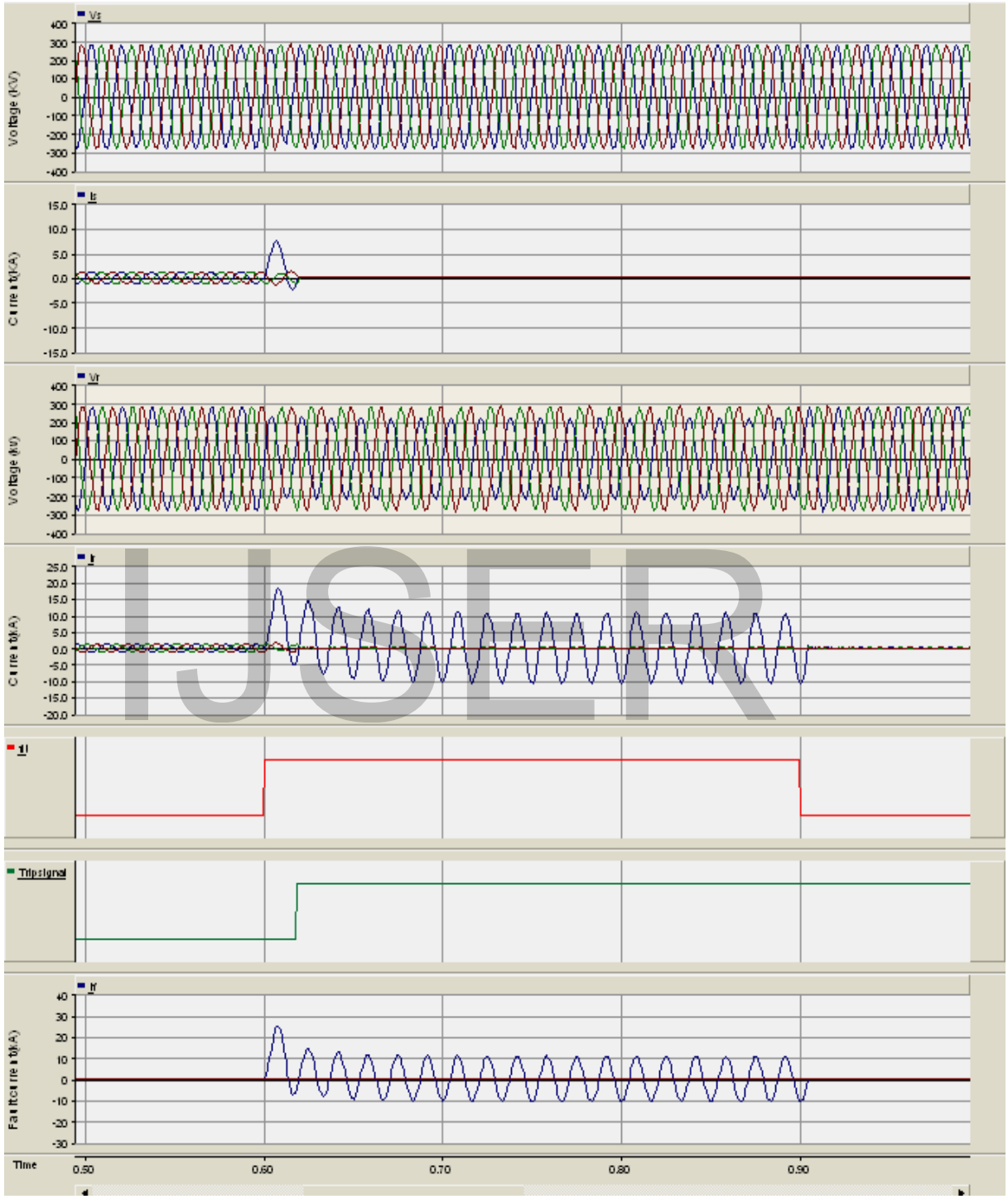

Figure 6.5 A-Ground fault inside the protected zone: (1) Sending-end voltage (2) Sending-end current (3) Receiving-end voltage (4) Receiving-end current (5) Duration of the fault (6) Trip signal of the Relay (7) Fault current.

Figure 6.6 and 6.7 show the trajectories of the apparent impedance and the wave forms of the voltages, currents and the trip signal of the relay for the same system with the A-G fault applied out of the protected zone, its clear that for such a position of the fault, distance relay should not operate and remain stable and the impedance seen by the relay will not take place in the circle.

Figure 6.6 Apparent impedance seen by Distance relay during A-Ground out of zone fault

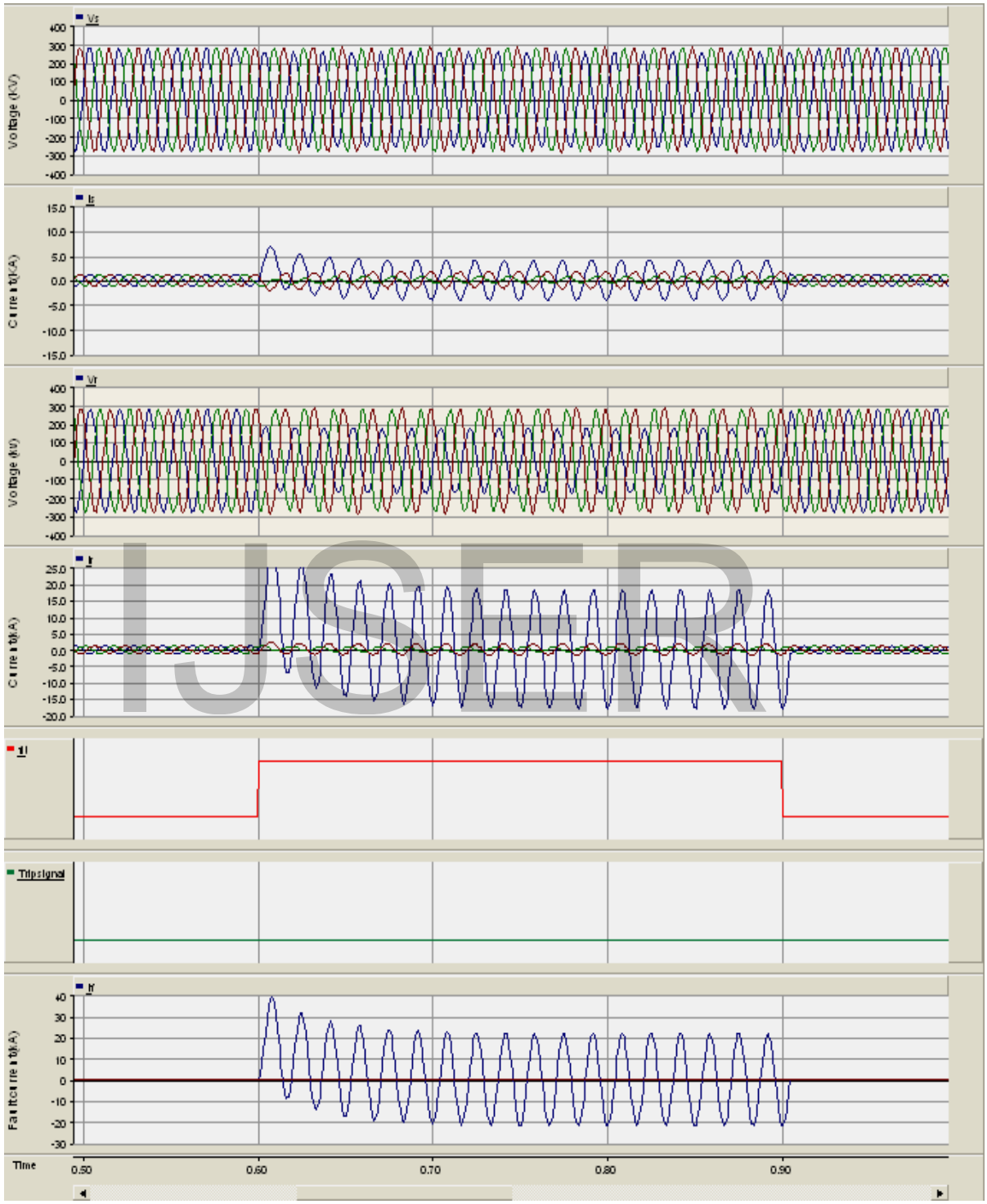

Figure 6.7 A-Ground fault out of the protected zone: (1) Sending-end voltage (2) Sending-end current (3) Receiving-end voltage (4) Receiving-end current (5) Duration of the fault (6) Trip signal of the Relay (7) Fault current.

6.8 B-C FAULT

Same system has been tested by phase B to phase C fault for both the location inside and outside the protected zone, the figures 6.8 and 6.9 show the apparent impedance and the wave forms of the power system during BC fault applied inside the protected zone of the distance relay, which is clear that only the faulted impedance (Zbc) take place inside the circle.

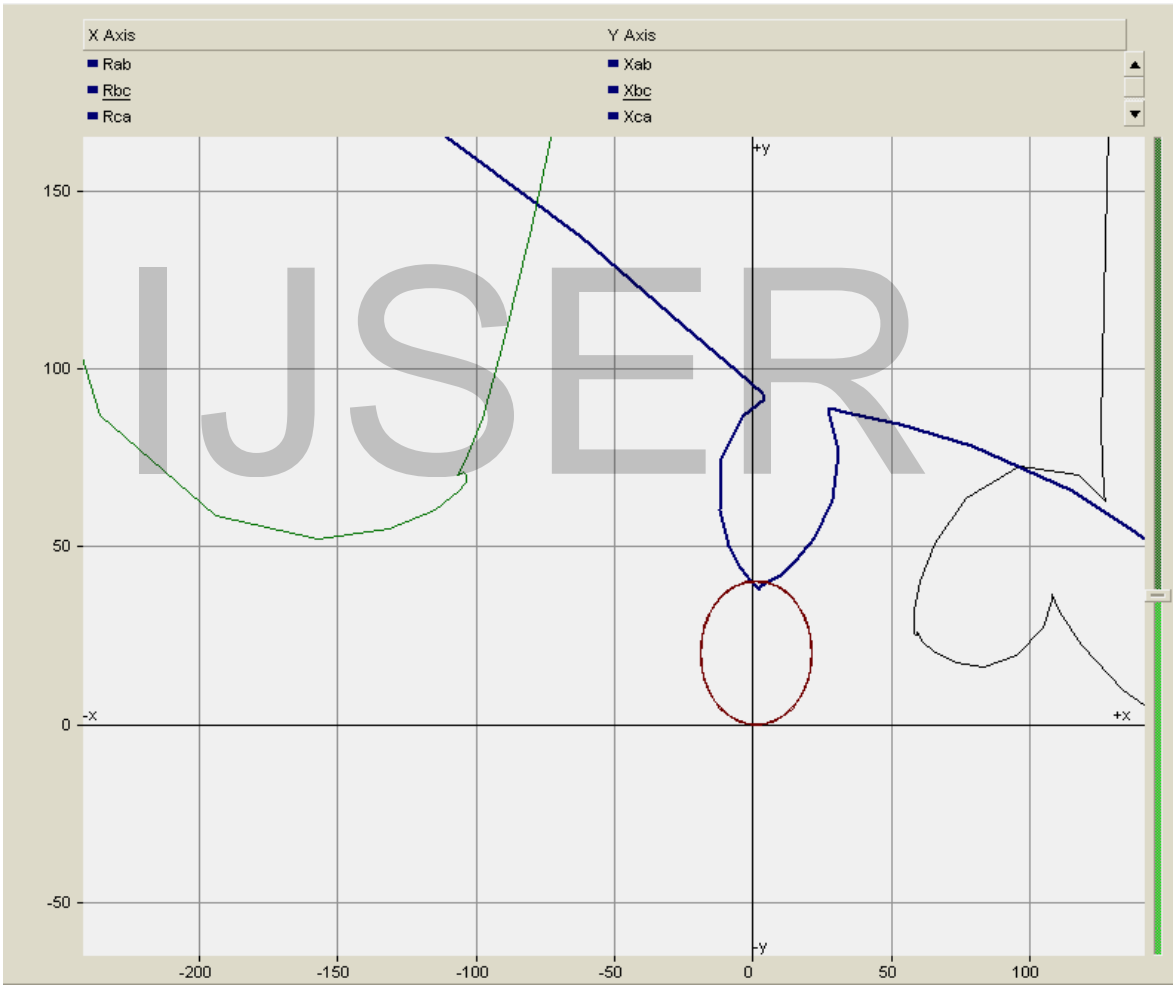

Figure 6.8 Apparent impedance seen during BC fault inside the zone

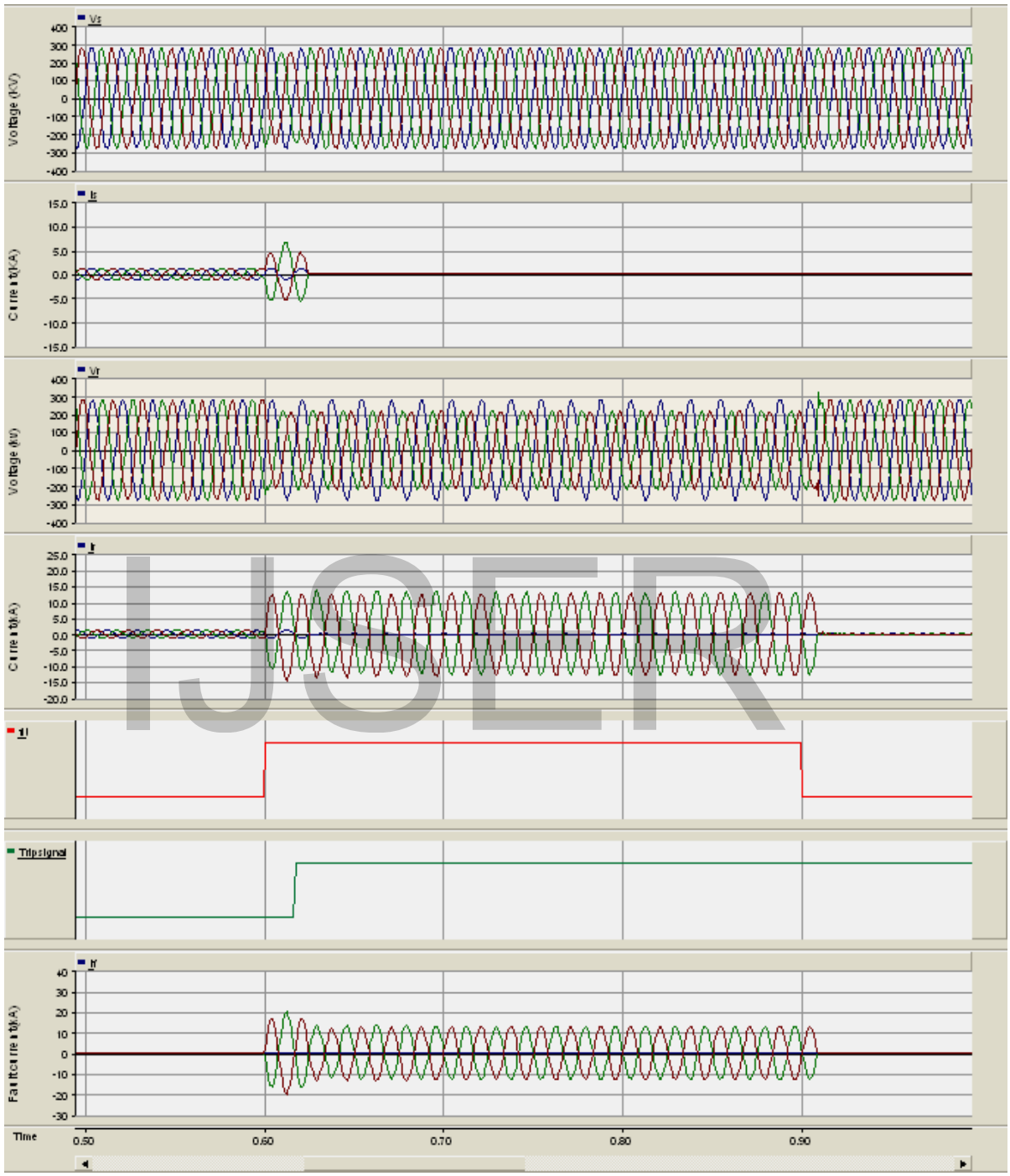

Figure 6.9 B-C fault inside the protected zone: (1) Sending-end voltage (2) Sending-end current (3) Receiving-end voltage (4) Receiving-end current (5) Duration of the fault (6) Trip signal of the Relay (7) Fault current.

Figure 6.10 and 6.11 show the trajectories of the apparent impedance and the wave forms of the voltages, currents and the trip signal of the relay for the same system with the B-C fault applied out of the protected zone, its clear that for such a position of the fault, distance relay should not operate and remain stable and the impedance seen by the relay will not take place in the circle.

Figure 6.8 Apparent impedance seen during BC fault out of the zone

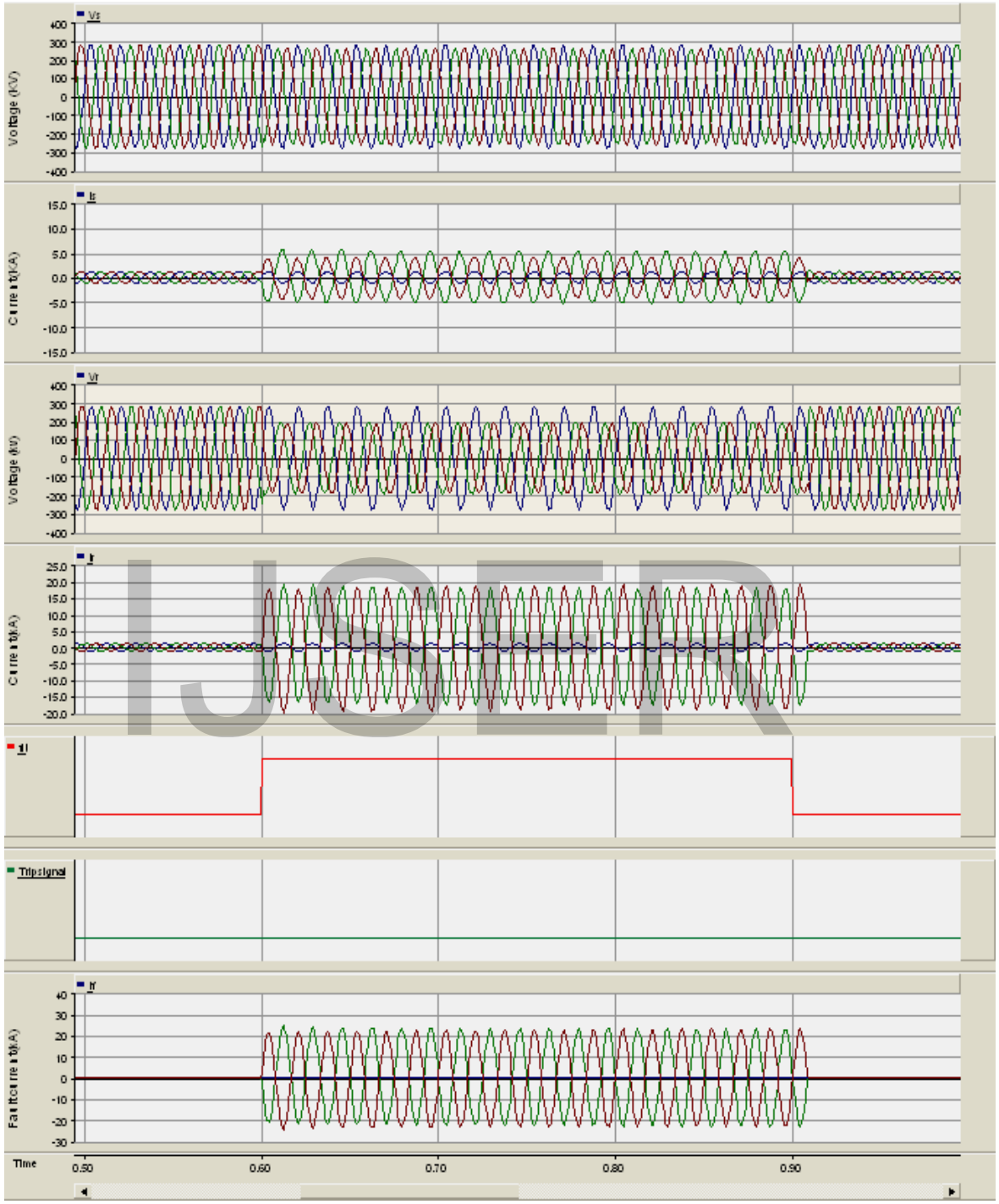

Figure 6.11 B-C fault out of the protected zone: (1) Sending-end voltage (2) Sending-end current (3) Receiving-end voltage (4) Receiving-end current (5) Duration of the fault (6) Trip signal of the Relay (7) Fault current.

6.9 THREE PHASE FAULT

Same system has been tested by three phase fault for both the location inside and outside the protected zone, the figures 6.12 and 6.13 show the apparent impedance and the wave forms of the power system during ABC fault applied inside the protected zone of the distance relay, which is clear that all the phases are taking place in the circle.

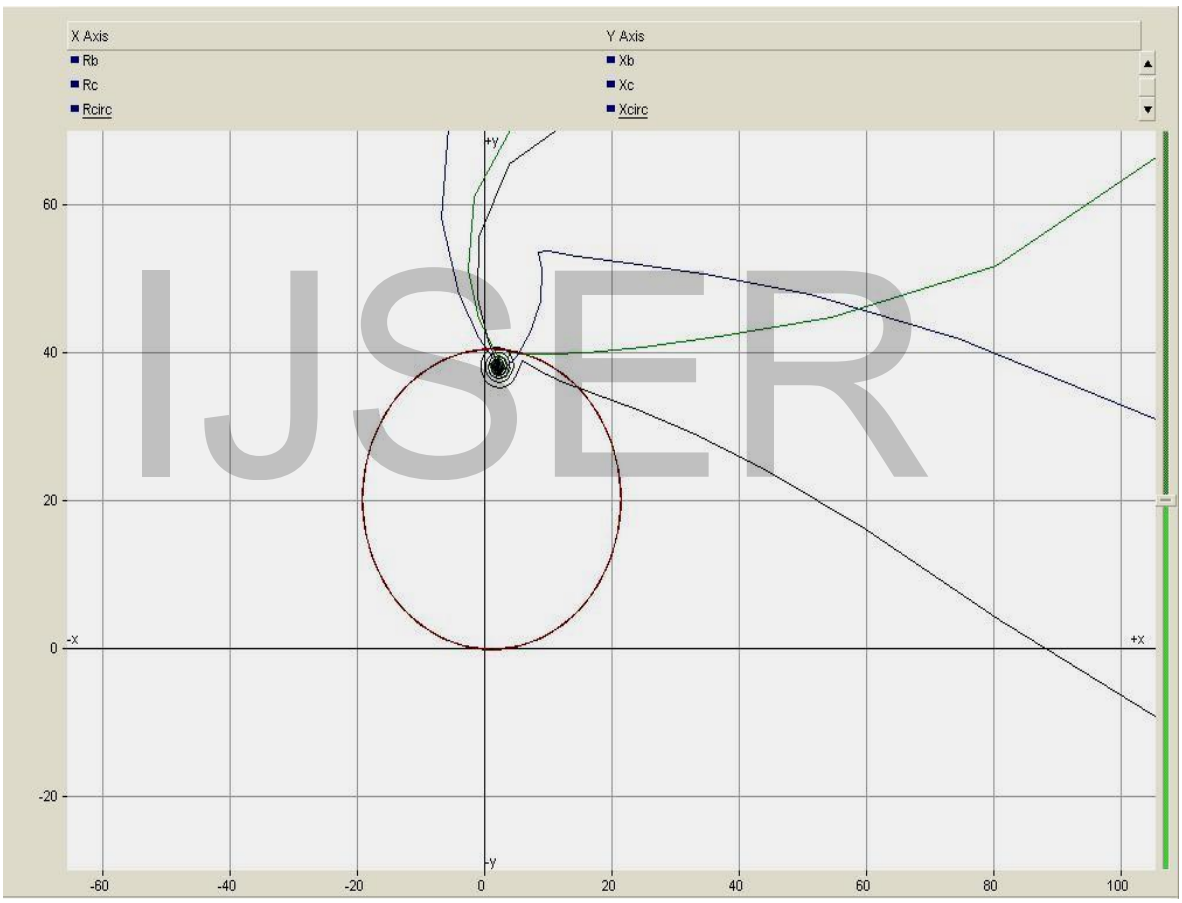

Figure 6.12 Apparent impedance seen during ABC fault inside the zone

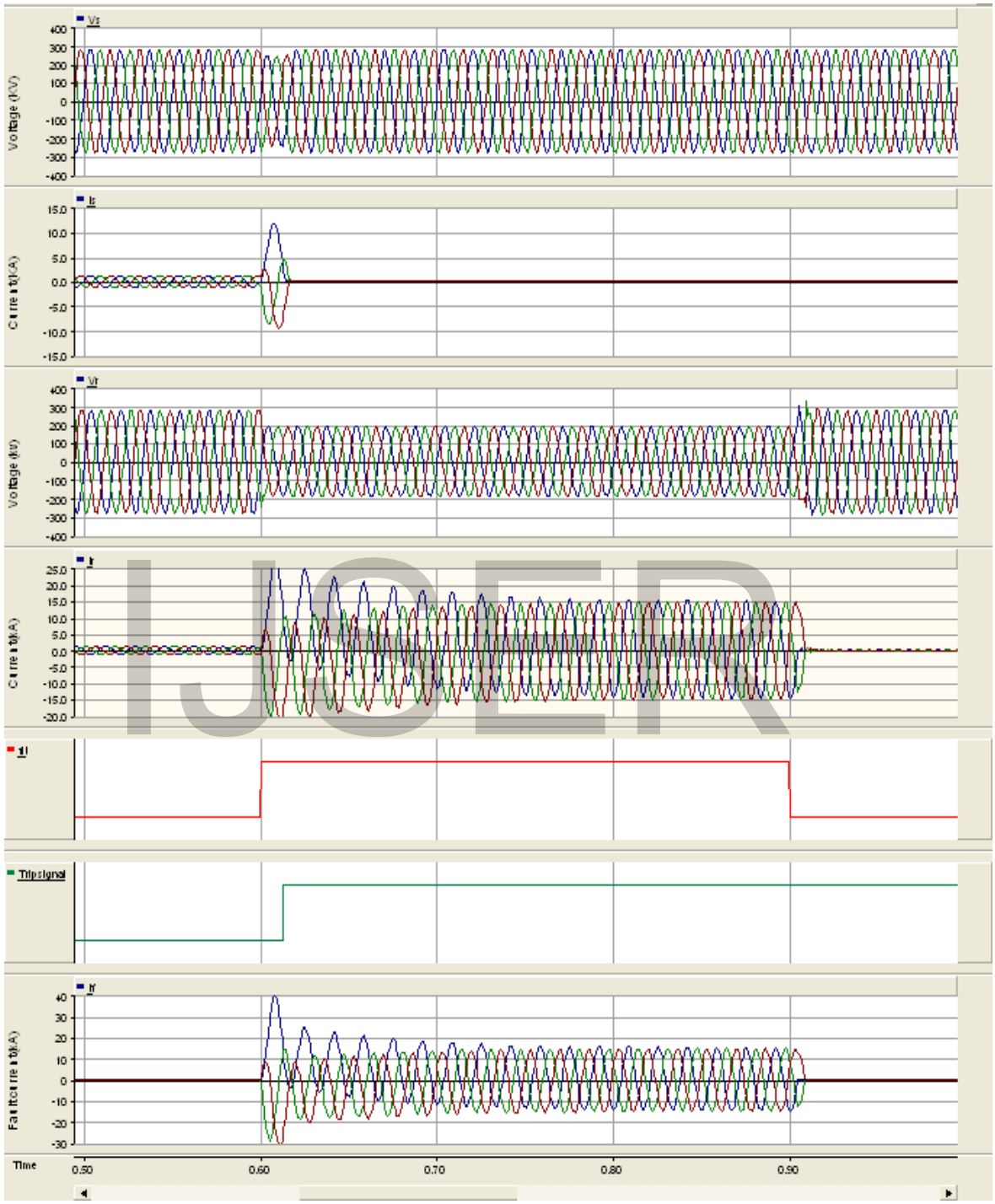

Figure 6.11 ABC fault inside the protected zone: (1) Sending-end voltage (2) Sending-end current (3) Receiving-end voltage (4) Receiving-end current (5) Duration of the fault (6) Trip signal of the Relay (7) Fault current.

Figure 6.14 and 6.15 show the trajectories of the apparent impedance and the wave forms of the voltages, currents and the trip signal of the relay for the same system with the ABC fault applied out of the protected zone, its clear that for such a position of the fault, distance relay should not operate and remain stable and the impedance seen by the relay will not take place in the circle.

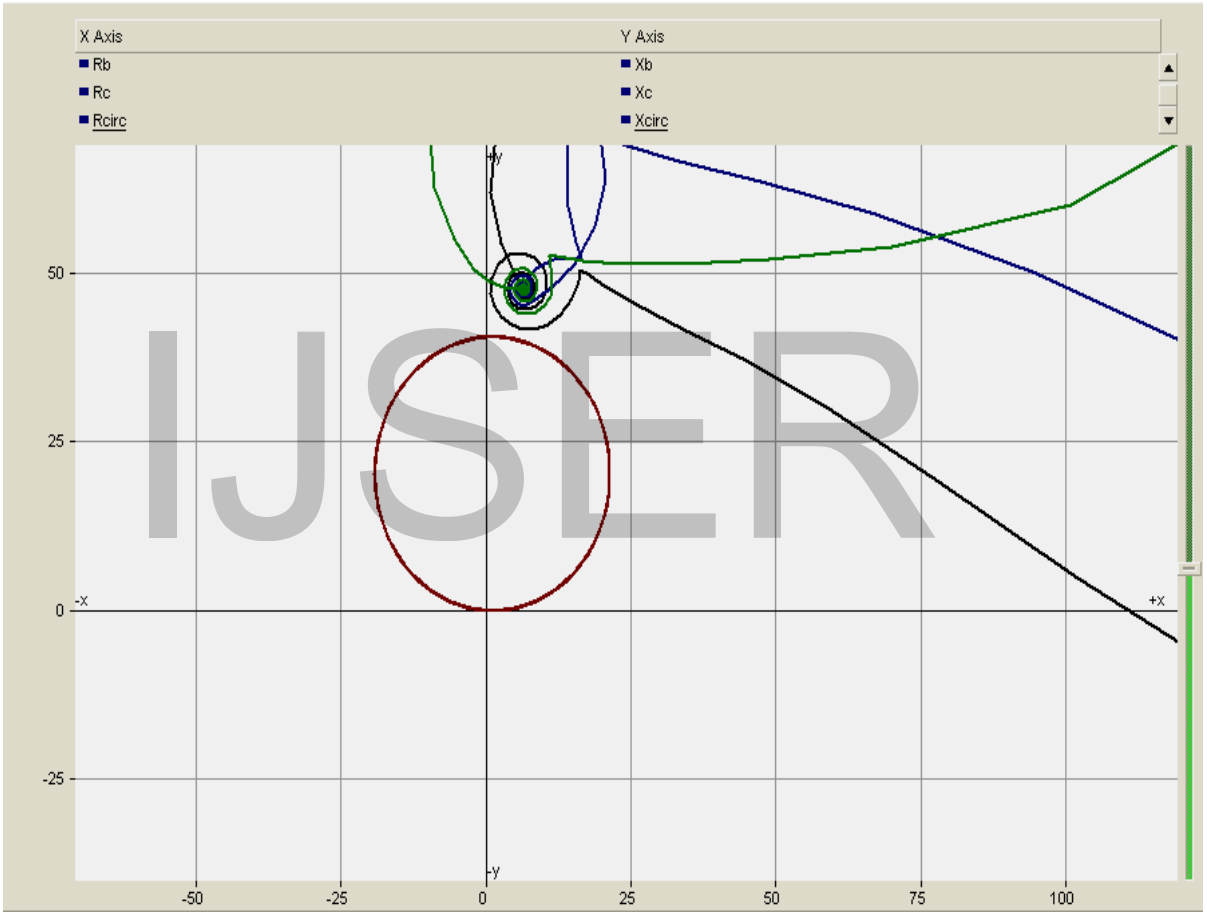

Figure 6.12 Apparent impedance seen during ABC fault out of the zone

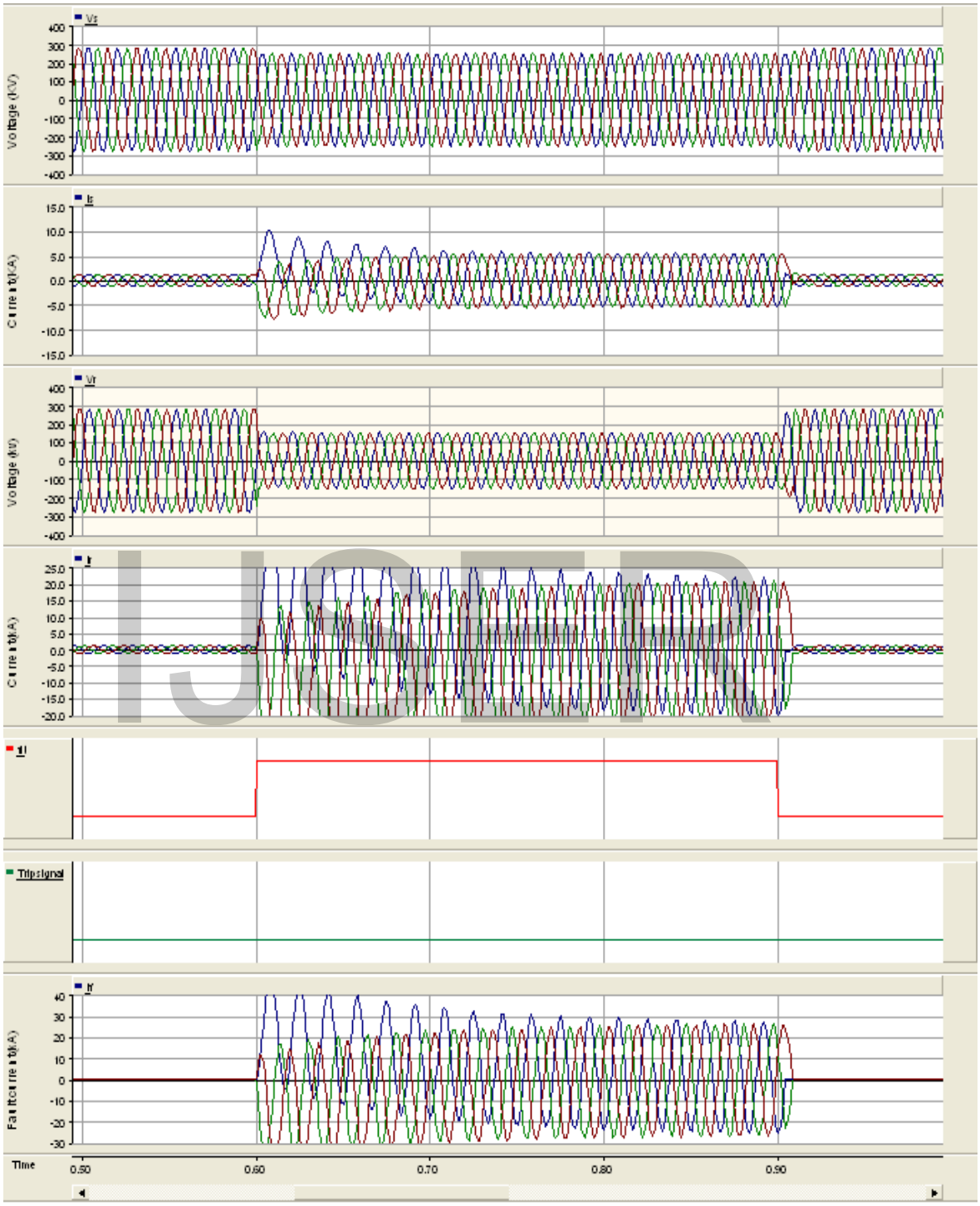

Figure 6.11 ABC fault out of the protected zone: (1) Sending-end voltage (2) Sending-end current (3) Receiving-end voltage (4) Receiving-end current (5) Duration of the fault (6) Trip signal of the Relay (7) Fault current.

7

SIMULATION OF THE STATCOM

7.1 INTRODUCTION

Power electronic techniques offer a promising approach for fast and flexible control of AC power network. The flexible AC transmission system (FACTS) has been for controlling power flow in transmission system and for enhancing power quality and reliability at the distribution level [25]. While early FACTS devices considered mainly of thyristors-controlled switched RLC components, the new generation of these devices is based on the self-commutated voltage source converter [25]. This new technology has resulted in equipment that is fundamentally different from the conventional static var compensator (SVC). The new device is called the static compensator, because its steady state output characteristics are similar to those of the rotating synchronous compensators.

The STATCOM behaves as a solid state synchronous voltage source that is analogous to an ideal synchronous machine. It is connected in shunt to the AC system (Figure 7.1) and generates or absorbs balanced set of (three) currents at the fundamental frequency, with rapidly controllable amplitude and phase angle. In this chapter first of all we will examine an AC power system with a pure inductive and capacitive load and then by the presence of such load we will add a STATCOM to the system to accurate the proper operation of the STATCOM which is connected to regulate the voltage at the mid-point of the power system.

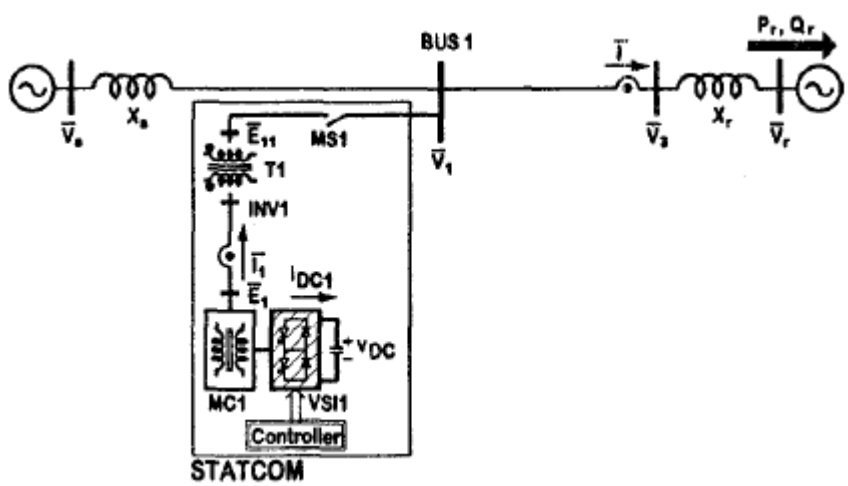

Figure 7.1 Shunt connection of STATCOM

7.2 Simulation of AC system

In this section we will examine the power system with either inductive or capacitive load to check the proper operation and the variation of reactive power of the power system in different conditions of loading as followings:

1- Running the simulation and connecting a pure inductive load at (t =2 s).
2- Running the simulation with a pure inductive load and disconnecting the load at (t =2 s).
3- Running the simulation and connecting a pure in capacitive load at (t =2 s).
4- Running the simulation with a pure capacitive load and disconnecting the load at (t =2 s).
5- Running the simulation with pure inductive load, then at (t =2 s) we will change the loads that we will disconnect the inductive load and at the same time we connect the capacitive load.

7.2.1 AC system with inductive load

Figures 7.2 show the simulated power system with a 600 MVAR pure inductive load connected at the mid-point, and figure 7.3 show the waveforms of the simulation of the same system, as it is clear in the figure the reactive power for the pure inductive load is negative; configuration of this system can be find in appendix (A).

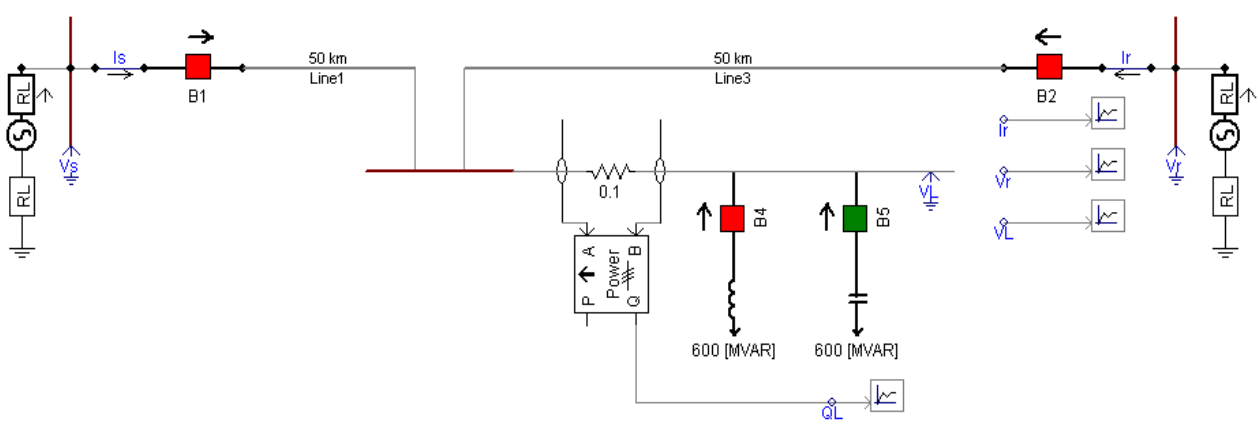

Figure 7.2 Simulated system with pure inductive load

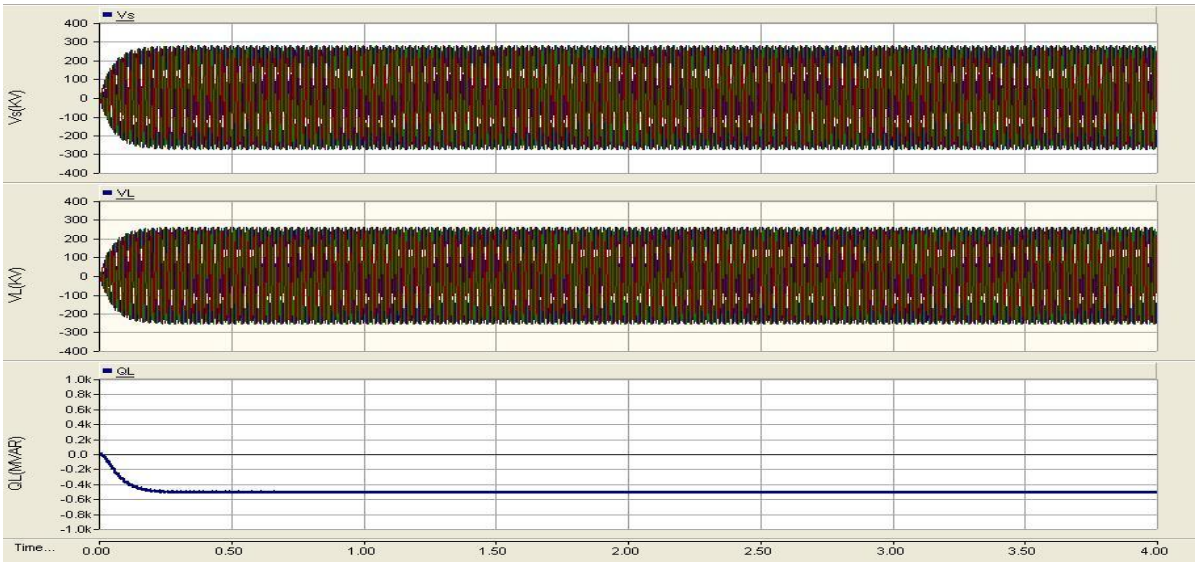

Figure 7.3 Waveforms of the power system with pure inductive load

Now the same system is simulated with the same load, but here we are disconnect and connecting the load at the (t =2 s) to check the proper change of the reactive power applied by the load (figures 7.4, 7.5).

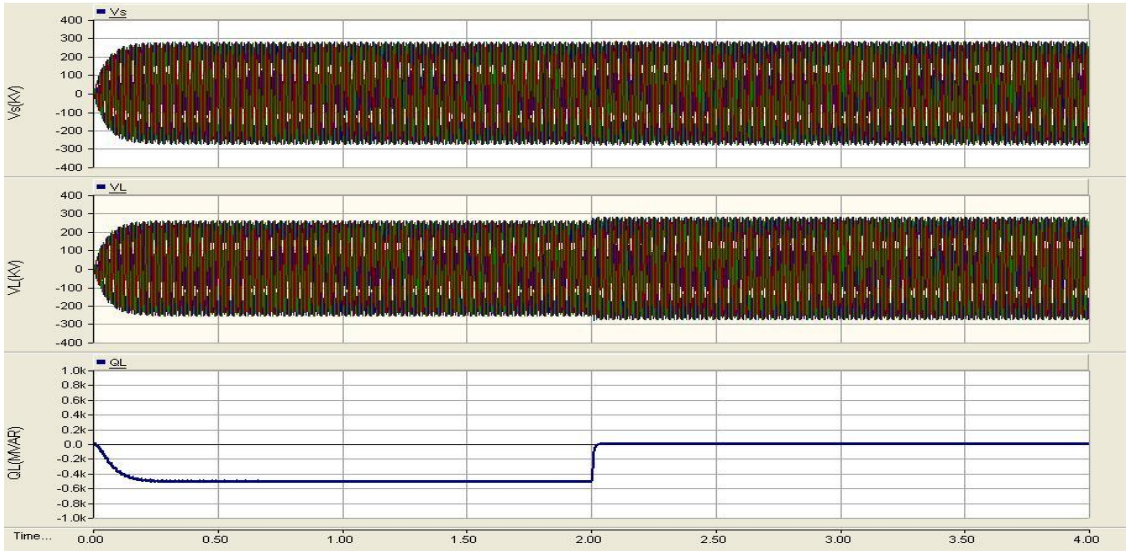

Figure 7.4 Inductive load is disconnected at (t =2 s)

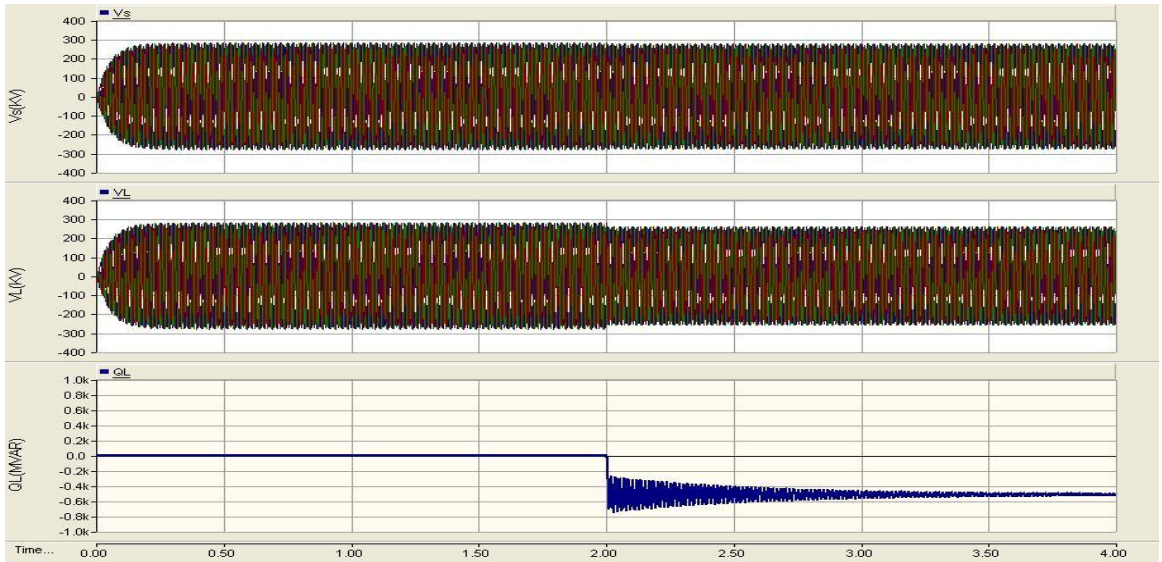

Figure 7.5 Inductive load is connected at (t =2 s)

7.2.2 AC system with capacitive load

In this section the same system has been tested with capacitive load, Figures 7.6 show the simulated power system with a 600 MVAR pure capacitive load connected at the mid-point, and figure 7.7 show the waveforms of the simulation of the same system, as it is clear in the figure the reactive power for the pure inductive load is positive; configuration of this system can be find in index (A).

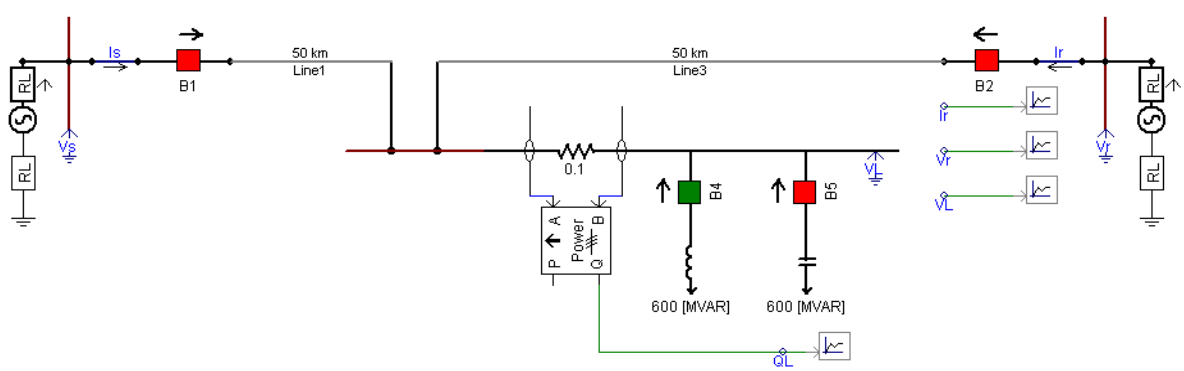

Figure 7.6 Simulated system with pure capacitive load

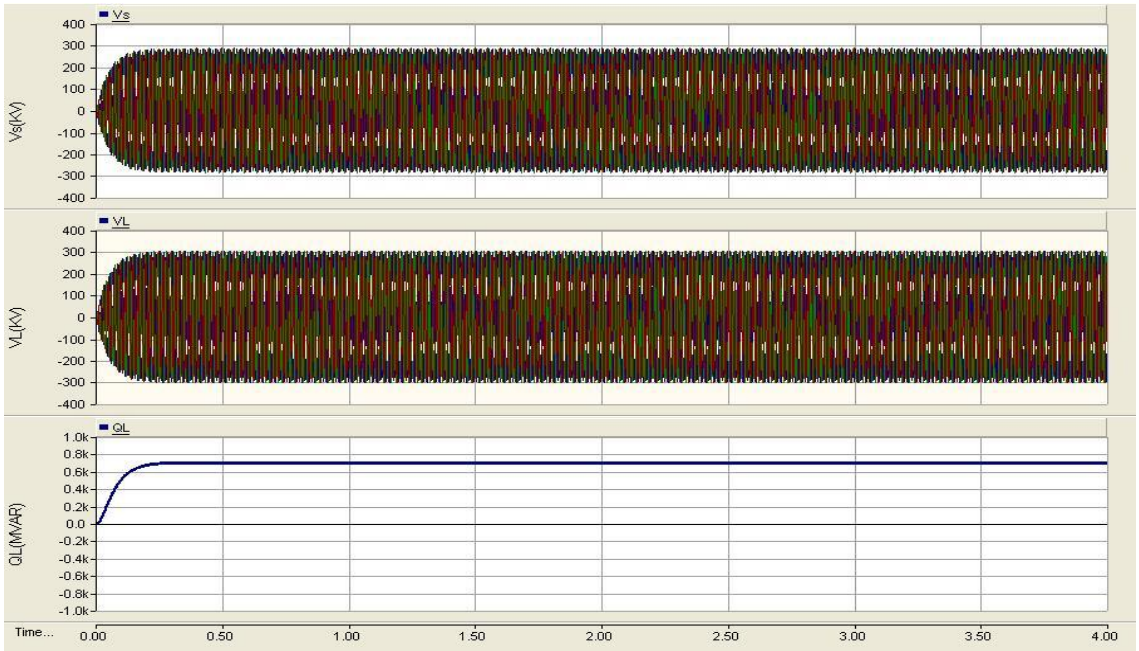

Figure 7.7 Waveforms of the power system with pure capacitive load

Now the same system is simulated with the same load, but here we are disconnect and connecting the load at the (t =2 s) to check the proper change of the reactive power applied by the load (figures 7.8, 7.9).

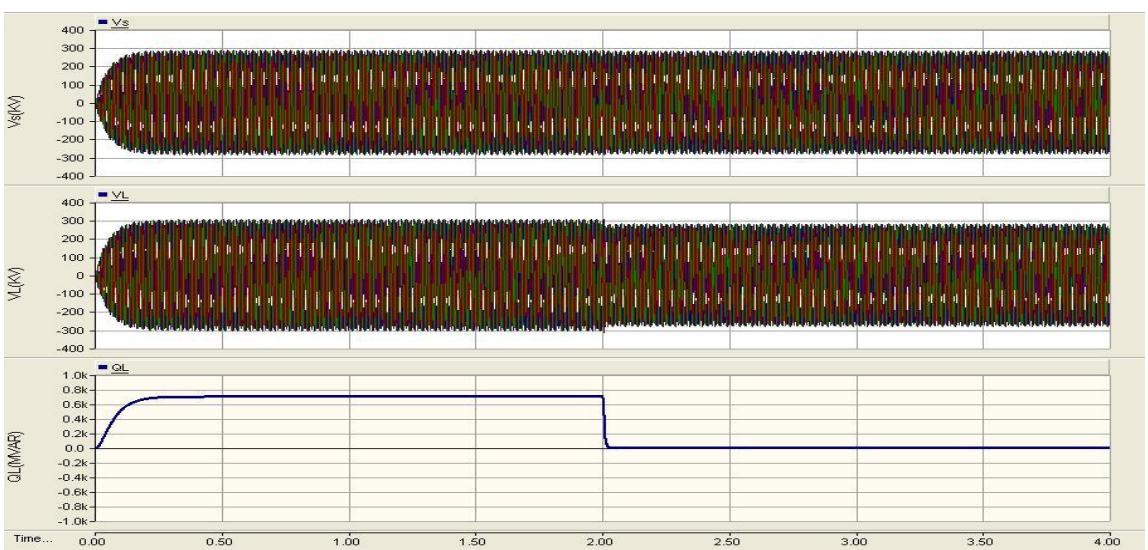

Figure 7.8 Capacitive load is disconnected at (t =2 s)

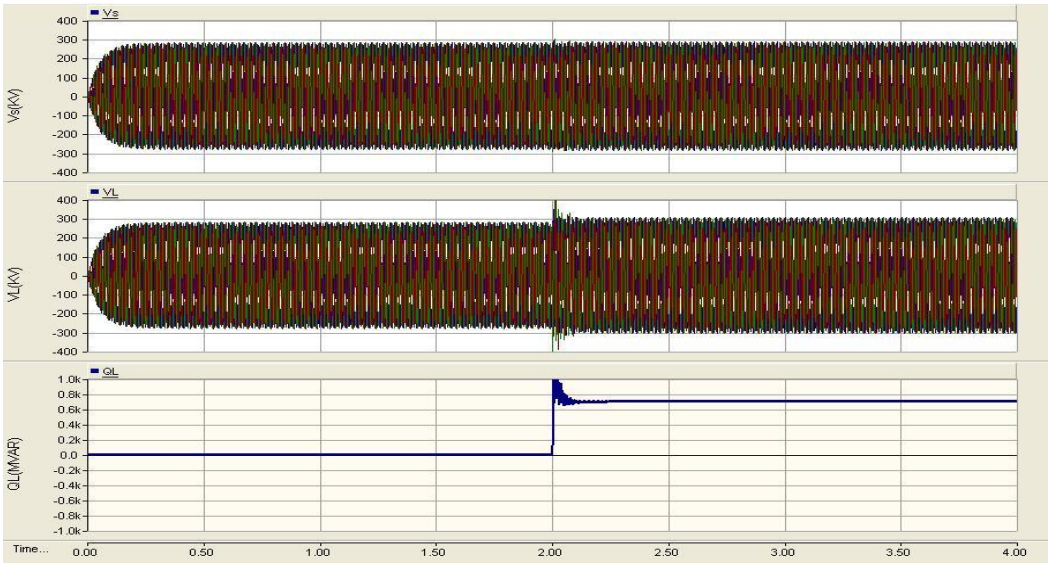

Figure 7.9 Capacitive load is connected at (t =2 s)

7.3 Simulation of STATCOM

A typical six-pulse voltage–sourced inverter type, 25 KV and 300 MVAR STATCOM connected at the mid-point of the power system is shown in figure 7.10. In its simplest form it consists of six self-commutated semiconductor switches, (IGBTs or GTOs), with the reverse-parallel diode connected across each switch. Basically, a STATCOM is a high power inverter/rectifier which uses a capacitor for energy storage. A leading or lagging current is produced by appropriate control of the switching devices, so that the STATCOM in effect provides a static VAR Controller function. In this section the same system in the previews section has been simulated with the STATCOM is controlled to boost the voltage at the mid-point of the transmission line. First of all the STATCOM has tested with applying a fault on the power system to see the reaction of the STATCOM to maintain the voltage of the power system at the point connected during the applied fault.

In the second step the same system with STATCOM has been considered, in addition inductive and capacitive load will be added to the system to show the proper operation and reaction of the STATCOM for the both condition either in inductive or in capacitive mode. Power system and STATCOM parameters are given in Appendix (A).

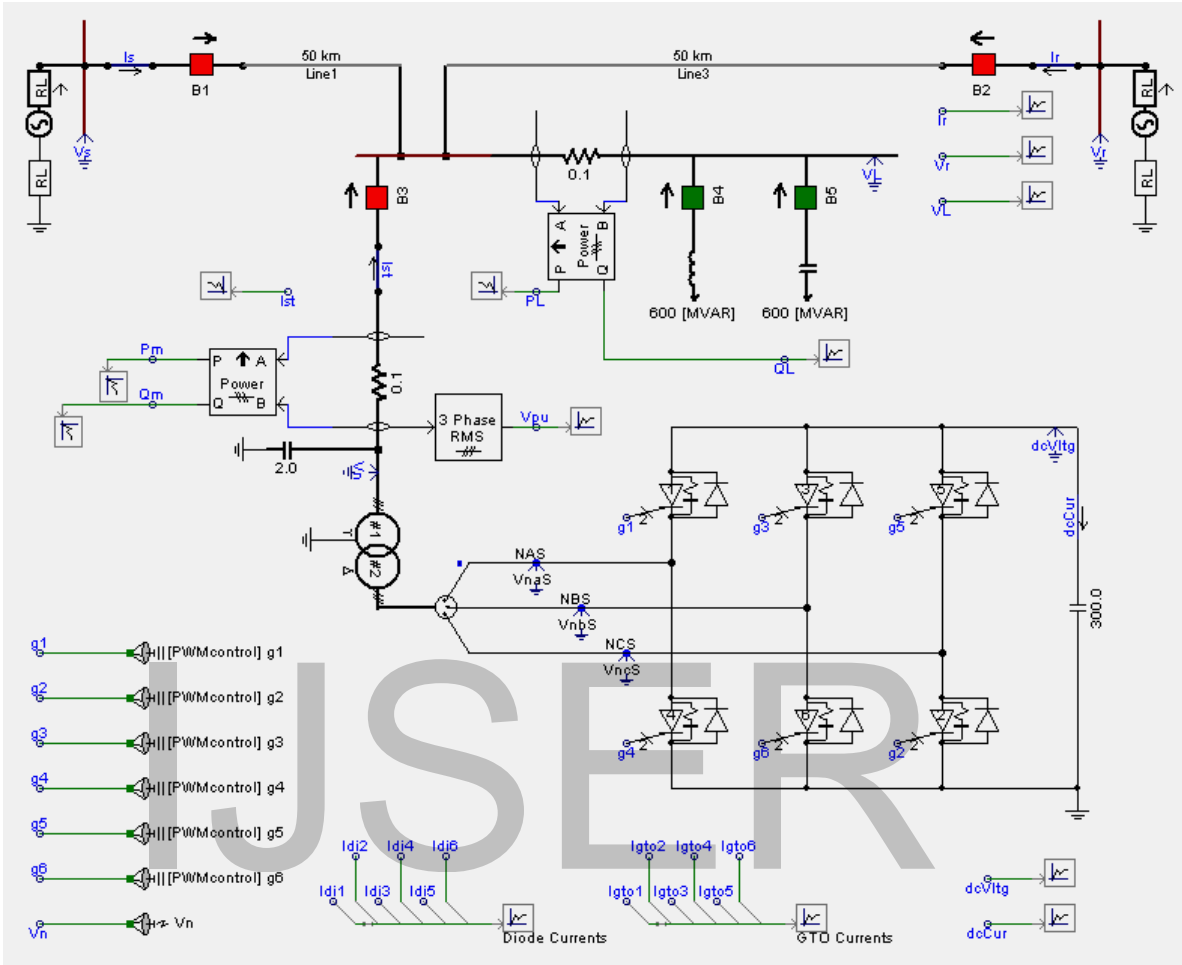

Figure 7.10 Circuit diagram of a 6-pulse STATCOM connected at the mid-point

7.3.1 VOLTAGE LOOP CONTROL

In this part, angel order based on voltage error will be generated. As we see in figure 7.11 Qm (measured reactive power of the STATCOM) and Vpu (measured voltage of the power system at the mid-point) will be the inputs of this parts. The setting value in terms of the desired voltage for STATCOM is 1.0 pu. The output of subtracting of reference voltage minus measured voltage is Verr which in order will be as input of PI controller which is the output of PI controller is the angle order, it represents the required shift between system voltage and voltage generated by STATCOM; the shift determines the direction and amount of real power flow.

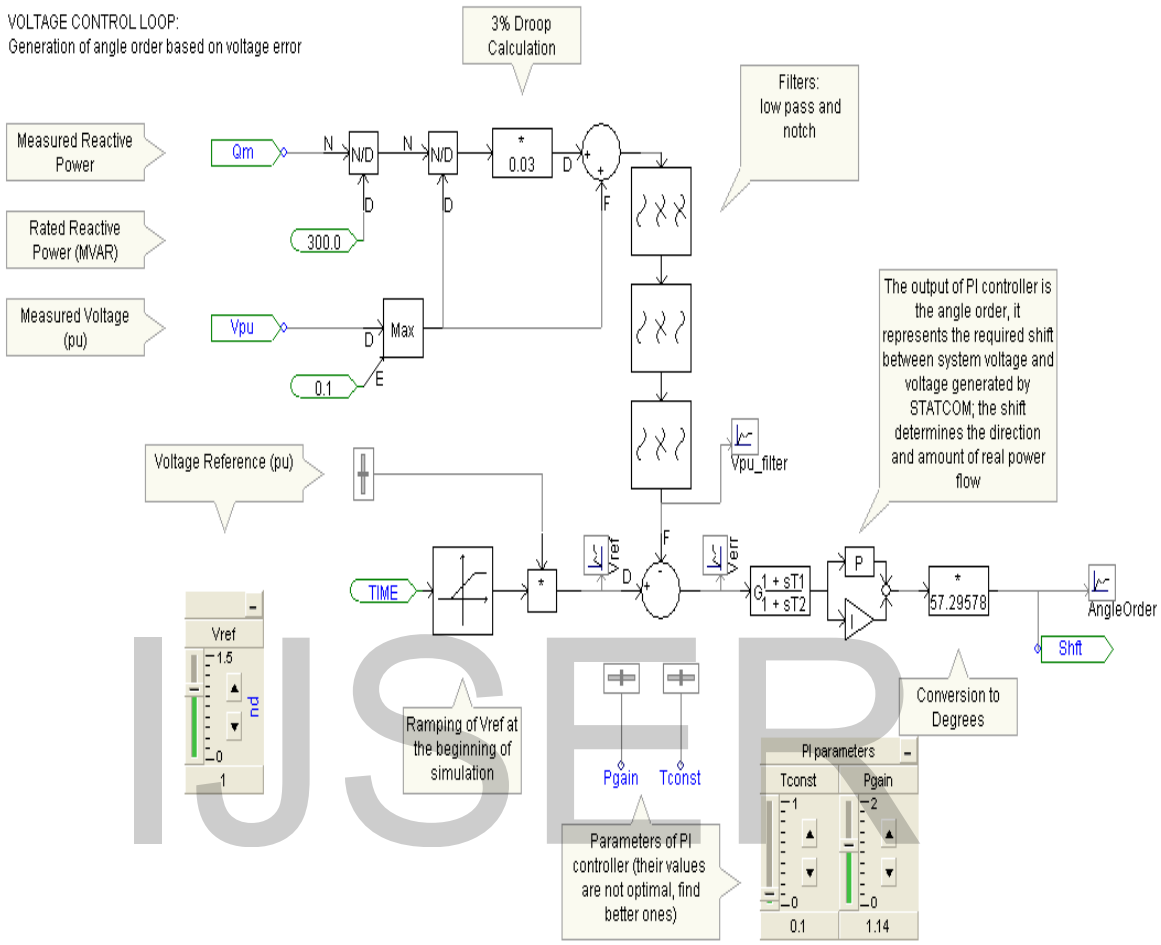

Figure 7.11 Voltage control loop

7.3.1.1 VOLTAGE SOURCE CONVERTOR (VSC)

A voltage-source converter is a power electronic device, which can generate a sinusoidal voltage with any required magnitude, frequency and phase angle. Voltage source converters are widely used in adjustable-speed drives, but can also be used to mitigate voltage dips. The VSC is used to either completely replace the voltage or to inject the 'missing voltage'. The 'missing voltage' is the difference between the nominal voltage and the actual. The converter is normally based on some kind of energy storage, which will supply the converter with a DC voltage. The solid-state electronics in the converter is then switched to get the desired output voltage. Normally the VSC is not only used for voltage dip mitigation, but also for other power quality issues, e.g. flicker and harmonics.

7.3.1.2 CONTROLLER

The aim of the control scheme is to maintain constant voltage magnitude at the point where a sensitive load is connected, under system disturbances. The control system only measures the r.m.s voltage at the load point, i.e., no reactive power measurements are required. The VSC switching strategy is based on a sinusoidal PWM technique which offers simplicity and good response. Since custom power is a relatively low-power application, PWM methods offer a more flexible option than the Fundamental Frequency Switching (FFS) methods favored in FACTS applications. Besides, high switching frequencies can be used to improve on the efficiency of the converter, without incurring significant switching losses. The controller input is an error signal obtained from the reference voltage and the value rms of the terminal voltage measured. Such error is processed by a PI controller the output is the angle δ, which is provided to the PWM signal generator. It is important to note that in this case, indirectly controlled converter, there is active and reactive power exchange with the network simultaneously: an error signal is obtained by comparing the reference voltage with the rms voltage measured at the load point. The PI controller process the error signal generates the required angle to drive the error to zero, i.e., the load rms voltage is brought back to the reference voltage (Figure 7.12).

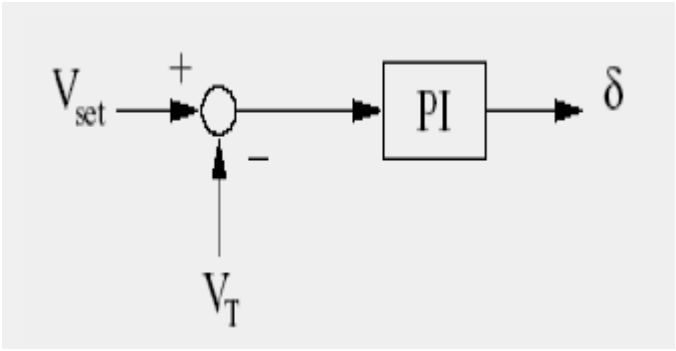

Figure 7.12 Indirect PI controller.

The sinusoidal signal $V_{control}$ is phase-modulated by means of the angle δ.

i.e,

$V_A = \text{Sin}\ (\omega t + \delta)$

V_B=Sin (ωt+δ-2π/3)

V_C = Sin (ωt +δ+2π/3)

The modulated signal $V_{control}$ is compared against a triangular signal in order to generate the switching signals for the VSC valves. The main parameters of the sinusoidal PWM scheme are the amplitude modulation index of signal, and the frequency modulation index of the triangular signal.

The amplitude index is kept fixed at 1 pu, in order to obtain the highest fundamental voltage component at the controller output.

$V_{control}$ is the peak amplitude of the control signal

V_{Tri} is the peak amplitude of the triangular signal

For example if the switching frequency is set at 1080 Hz. The frequency modulation index is given by,

$m_f = f_s/f_1 = 1080/60 = 18$

Where f_1 is the fundamental frequency.

The modulating angle is applied to the PWM generators in phase A. The angles for phases B and C are shifted by 240^0 and 120^0, respectively. It can be seen in that the control implementation is kept very simple by using only voltage measurements as the feedback variable in the control scheme. The speed of response and robustness of the control scheme are clearly shown in the simulation results.

7.3.2 PWM CONTROL

PWM control is shown in two parts which the part 1 is Generation of triangular waveforms synchronized with system ac voltage and the part 2 is Generation of reference waveforms synchronized with system ac voltage and shifted by the angle order (figures 7.13 and 7.14).The modulating angle is applied to the PWM generators in phase A. the angels for phases B and C are shifted by 240 and 120 degrees respectively. It can be seen in that the control implementation is kept very simple by using only voltage measurements

as the feedback variable in the control scheme. The speed of response and robustness of the control scheme are clearly shown in the simulation results.

7.3.2.1 EFFECT OF THE "PLL"

The PLL provides the basic synchronizing signal which is the phase angle of the bus voltage, θ. It is obtained from the zero crossing of the bus voltage. In the case of a sudden change in the power system, such as load rejection, it takes about half a cycle of voltage (8.3 ms for f =60 Hz) for the PLL to be synchronized with the new voltage phase angle, plus the signal processing delay. During this time the STATCOM operates at the previous phase angle, while the bus voltage phase has changed. Depending on the amount of phase angle change and whether it is increased or decreased, an uncontrolled real power, and therefore reactive power exchange would occur between the STATCOM and the transmission line during this inherent PLL delay.

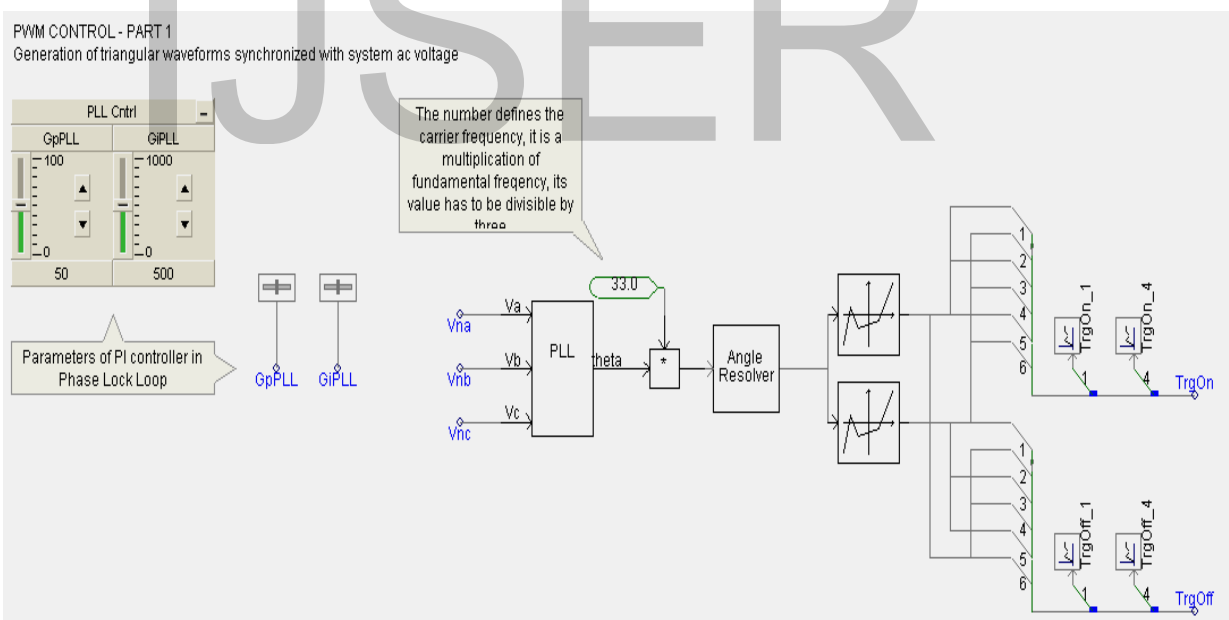

7.13 Part 1; PWM control

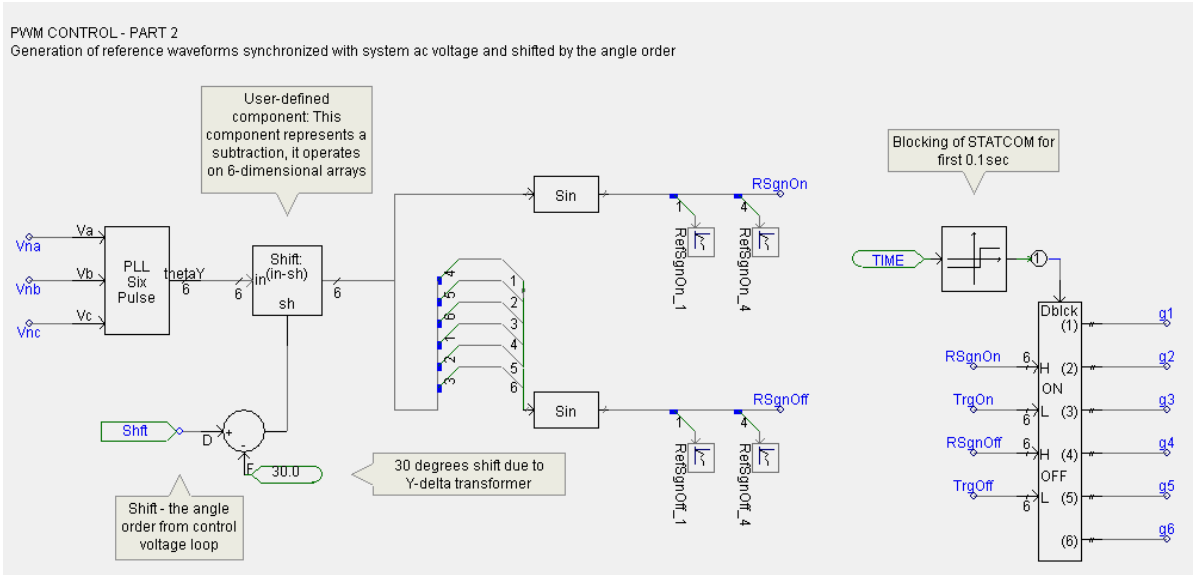

7.14 Part 2; PWM control

7.3.3 STATCOM without fault

To demonstrate the effect of the power system on the STATCOM stability, a simulation using the 6-pulse converter was performed by PSCAD. Figure 7.15 show the wave forms of simulation results of power system simulated with STATCOM connected at the mid-point and no fault applied to the power system, and figure 7.16 show the waveforms of the STATCOM parameters .

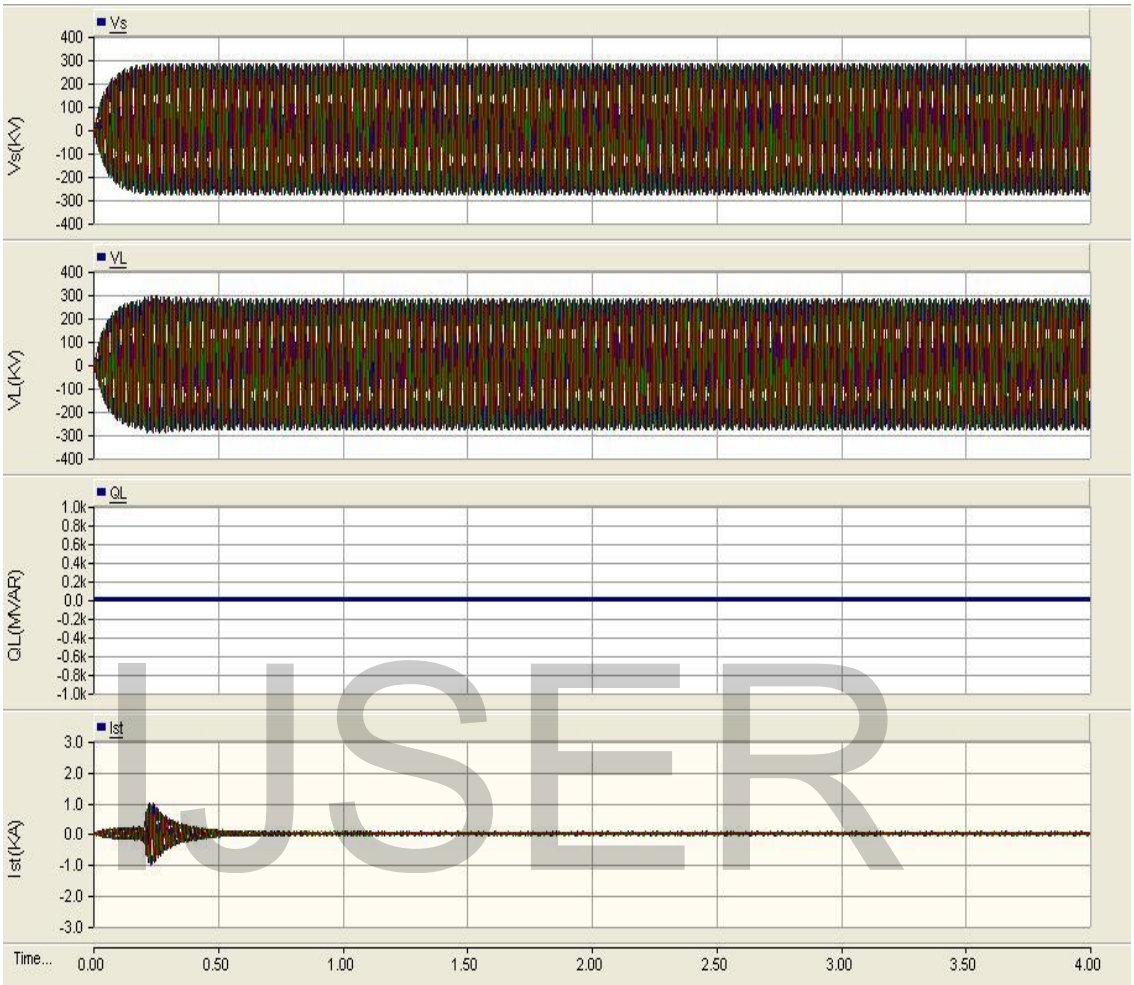

Figure 7.15 Wave forms of the power system, when the STATCOM connected at the mid-point without fault (1); Sending-end voltage (2); Load voltage (3); Reactive power of the load (4); Statcom current.

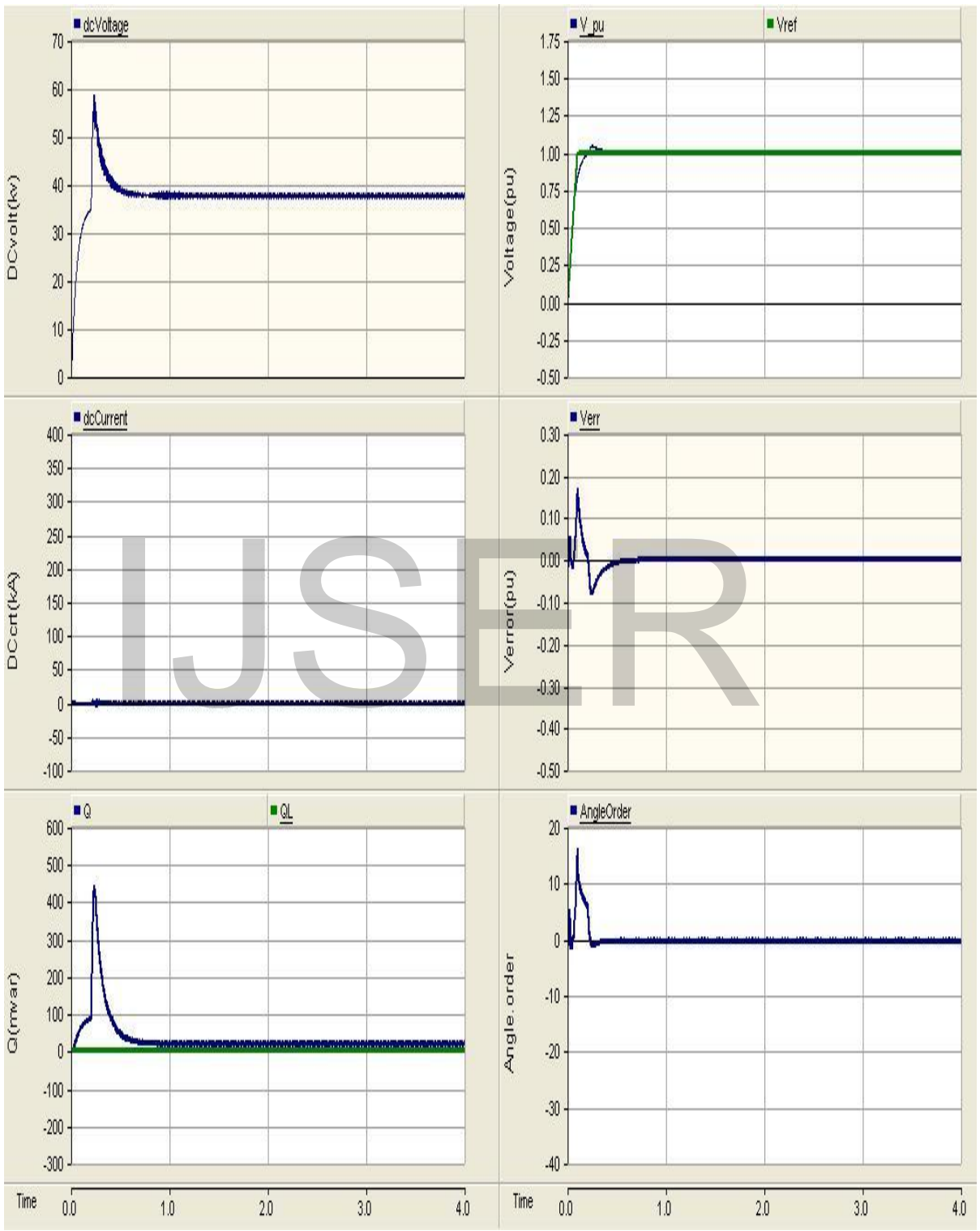

Figure 7.16 STATCOM parameters waveforms during simulation without fault

7.3.4 STATCOM with fault

This step of simulation contains STATCOM and three-phase to ground fault is applied to the power system, during the period (1.5-2.25 s), which the simulation duration is 4 seconds. As shown in figures 7.17 and 7.18 the very effective voltage regulation is provided by STATCOM can be clearly appreciated.

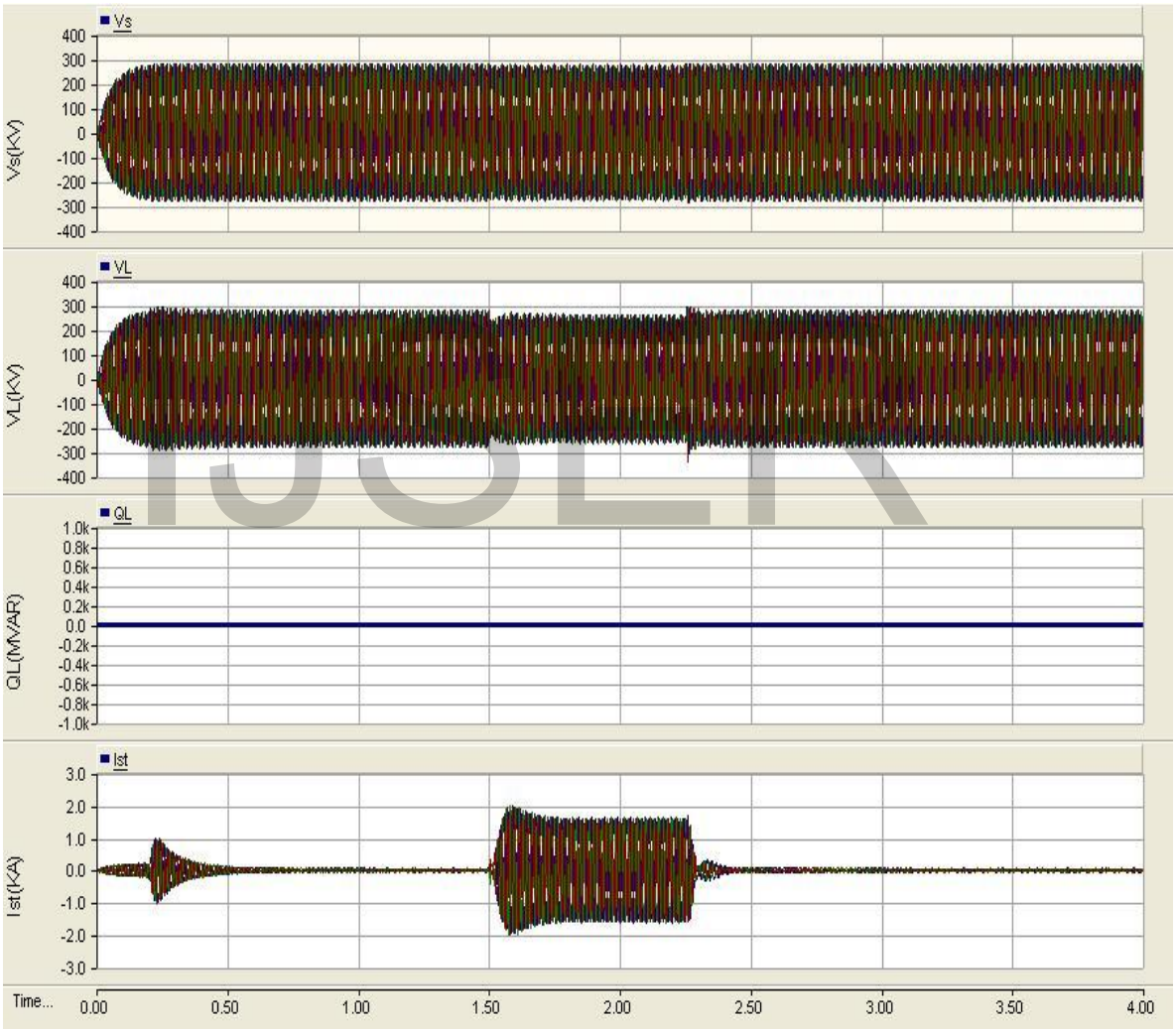

Figure 7.17 Wave forms of the power system, when the STATCOM connected at the mid-point with fault (1); Sending-end voltage (2); Load voltage (3); Reactive power of the load (4); Statcom current.

Figure 7.18 STATCOM parameters waveforms during simulation with fault

7.3.4 STATCOM with inductive/ capacitive loads

Here, the same STATCOM connected at the mid-point of the same system has been examined with pure inductive and pure capacitive loads which the inductive load is connected from the beginning of the simulation and at the (t =2 s) a changeover is applied between the inductive and capacitive loads to demonstrate the reaction and voltage

regulation provided by STATCOM (Figures 7.19, 7.20). The sequence of the beakers changeover is shown in figure 7.21.

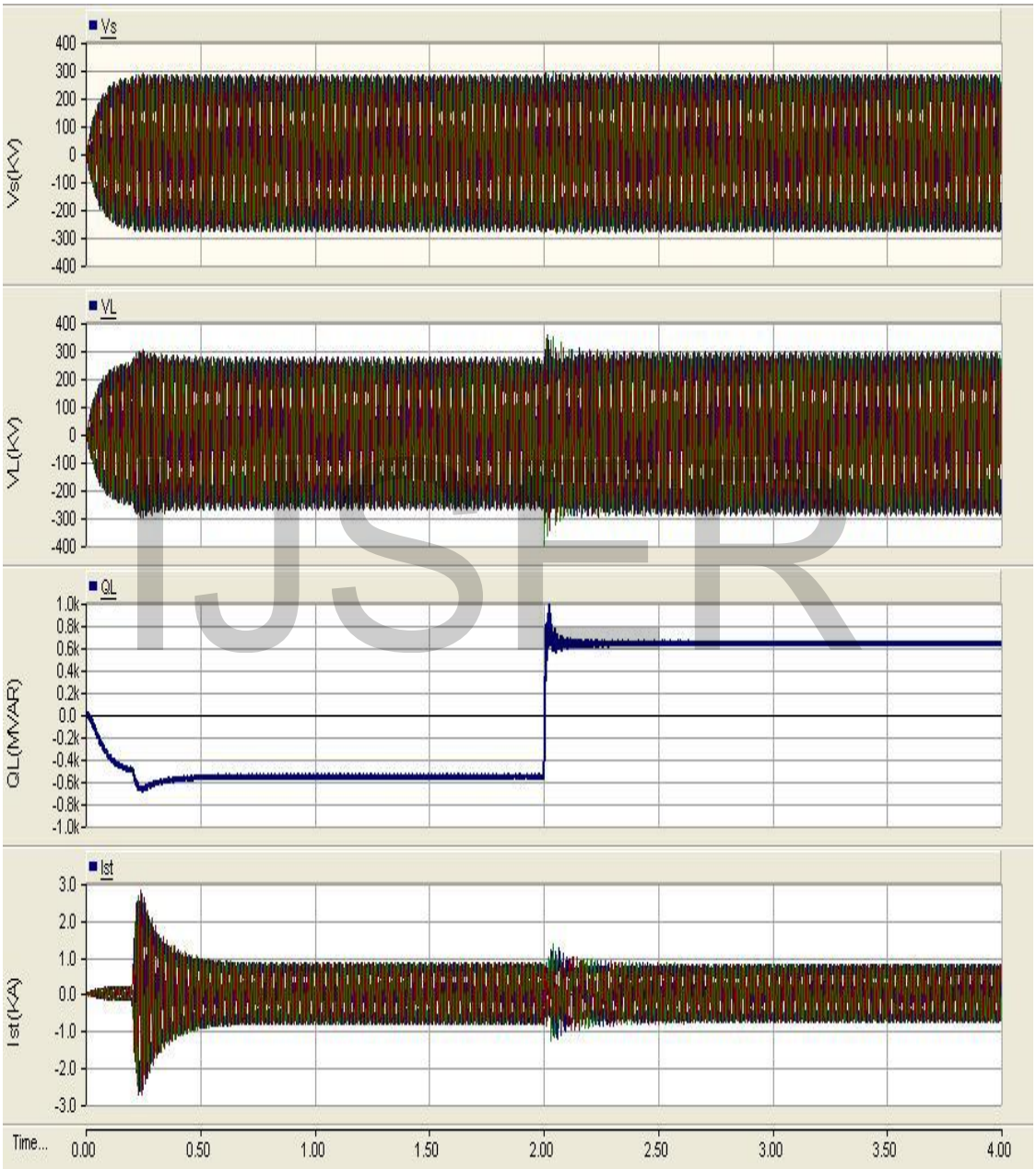

Figure 7.19 Wave forms of the power system, when the STATCOM connected at the mid-point during loads changeover (1); Sending-end voltage (2); Load voltage (3); Reactive power of the load (4); Statcom current.

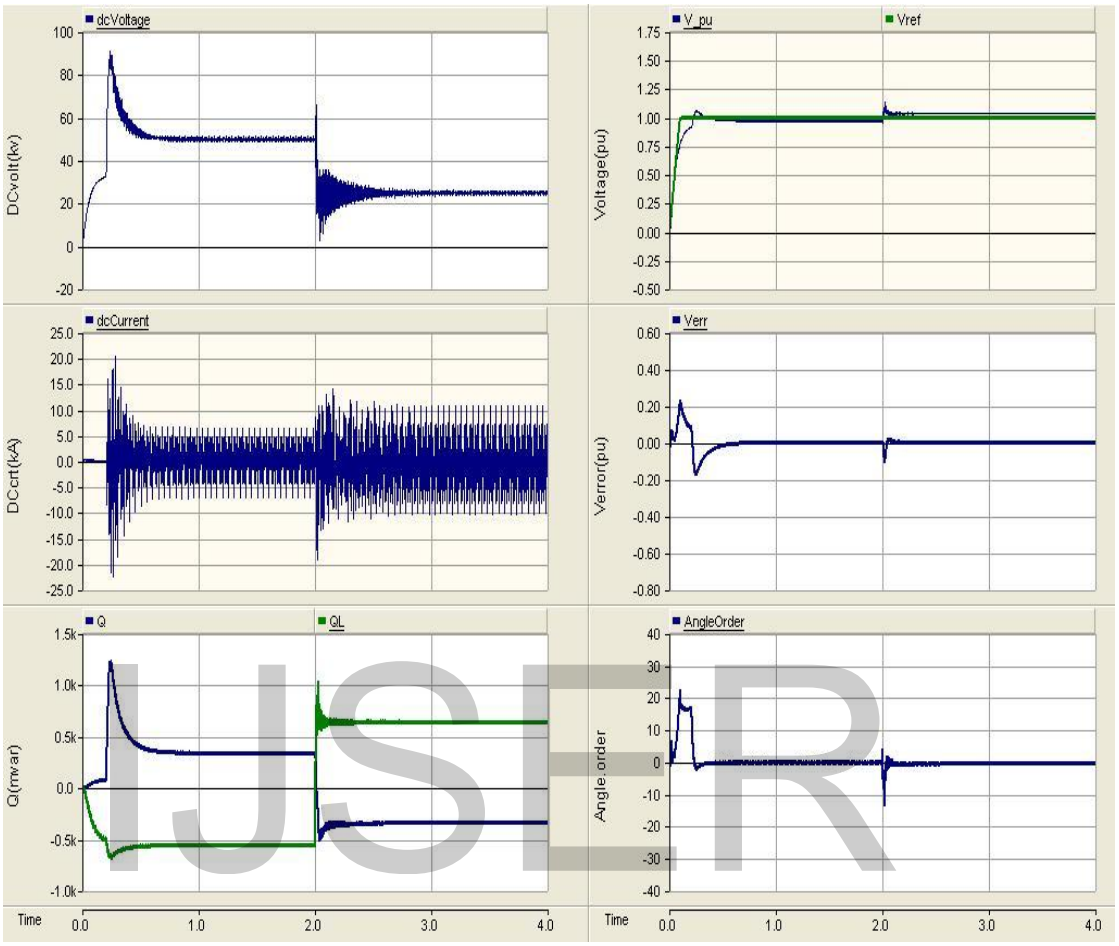

Figure 7.20 STATCOM parameters waveforms during loads changeover

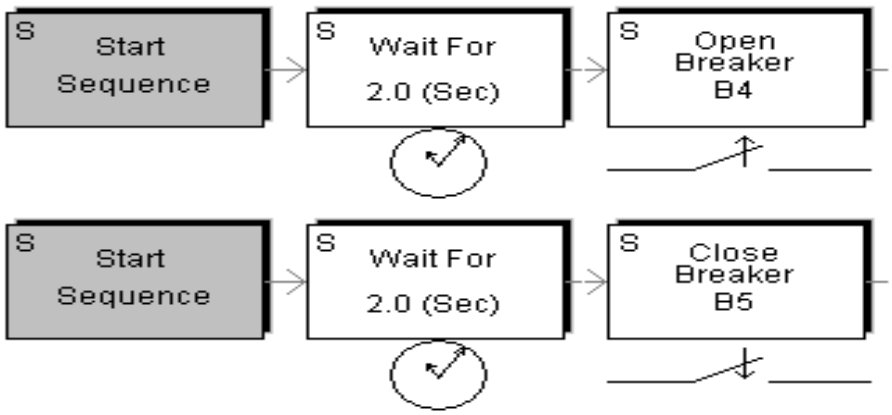

Figure 7.21 Sequence of the beakers changeover during loads changeover.

8

PROPOSED METHOD

8.1 Introduction

The measured impedance at the relaying point is the basis of the distance protection operation. There are several factors affecting the measured impedance at the relaying point. Some of these factors are related to the power system parameters prior to the fault instance [25], which can be categorized into two groups. First group are the structural conditions, represented by the short circuit levels at the transmission line ends, whereas the second group are the operational conditions, represented by the line load angle and the voltage magnitude ratio at the line ends. In addition to the power system parameters, the fault resistance could greatly influence the measured impedance, in a way that when the fault resistance is equal to zero, the power system parameters do not affect the measured impedance. In other words, power system parameters affect the measured impedance only in the presence of the fault resistance, and as the fault resistance increases, the impact of power system parameters becomes more and more.

In the recent years FACTS devices are introduced to the power systems to increase the transmitting capacity of the lines and provide the optimum utilization of the system capability. This is done by pushing the power systems to their limits [25]. It is well documented in the literature that the introduction of FACTS devices in a power system has a great influence on its dynamics. As power system dynamics change, many sub-systems are affected, including the protective systems. Therefore, it is essential to study effects of FACTS devices on the protective systems, especially the distance protection, which is the main protective device at EHV level.

Unlike the power system parameters, the controlling parameters of FACTS devices, as well as their installation points could affect the measured impedance when the fault resistance is zero. In the presence of FACTS devices, the conventional distance characteristic such as Mho and Quadrilateral are greatly subjected to mal-operation in the form of over-reaching or under-reaching the fault point. Therefore, the conventional characteristics might not be usable in the presence of FACTS devices.

The impact of STATCOM on the measured impedance has been discussed in [26], by assuming the instantaneous operation of its controlling system. The effects of series connected FACTS devices on the measured impedance at the relaying point have been

presented in [26] and more detailed studies for Unified Power Flow Controller (UPFC) have been presented in [26], Where it has been assumed that the protective system operate before the FACTS devices controlling system. The use of flexible alternating current transmission (FACTS) devices in power systems for increasing the power transfer and providing the optimum utilization of system capability by pushing the power systems to their limits has been of worldwide interest in the recent years. Literature reviews indicated that FACTS devices introduce new power system dynamics that must be analyzed by the system protection engineer [24]. These dynamics can be summarized as the following:

1) The rapid changes in system parameters such as line impedance, power angle and line currents;

2) The transients that are introduced by the associated control action;

3) The harmonics introduced into the adjacent ac power system.

Because of these concerns, the protection relays requirements cannot be clearly defined until a particular FACTS strategy is modeled and analyzed within its power system. Such protection requirements are

1) A need for an adaptive relay characteristic as the system parameters and configuration are rapidly changed by the FACTS devices;

2) Assurance that the various protective relays can accommodate different power system contingencies and control modes of the FACTS devices;

3) Specifying the operating times and tripping schemes of the protection relays.

The study in [26] proposed an adaptive protection for transmission lines employing advanced series compensated (ASC) transmission lines. In conclusion, the literature studies and the operating experience with static compensators (SVC) and thyristor controlled series capacitor (TCSC) have demonstrated the need to modify protective relay operating characteristics. Among the different types of FACTS devices, the static var compensators (SVCs) are devices that control the voltage at their point of connection to the power system by adjusting their susceptance to supply or absorb reactive power [27], [28]. In general, SVCs are characterized by their ability to rapidly vary the reactive output to compensate for changing system conditions [29], [30]. The development in power electronic devices such as gate turn off devices (GTOs) allows implementation of the so-called advanced static var

systems (SVS). The static synchronous compensator (SSC or STATCOM) is an example of the advanced SVS. The STATCOM consists of three-phase sets of several gate turn-off switch-based valves and a DC link capacitor and controller thus replacing the conventional reactive power compensators. The objective of this paper is to analyze and investigate the impact of midpoint compensation using a STATCOM on the performance of impedance-based protection relays under normal operation and fault conditions at different load power angles. A computer program based on these equations was developed to investigate the response of the distance relay under normal and fault conditions with and without the STATCOM. The results are also verified using the PSCAD/EMTDC simulation program [31].

The proposed technique will analyze and explore the impact of STATCOM employed in a transmission system on the performance of distance relay. First, a detailed model of DIANCE RELAY and STATCOM is proposed and secondly, the analytical results based on symmetrical component transformation for single phase to ground, three-phase fault and two phase together faults on a transmission system employing STATCOM are presented, the simulation results clearly show the impact of STATCOM devices on the performance of distance relay. The proposed technique, described with reference to the system of figure 8.1.

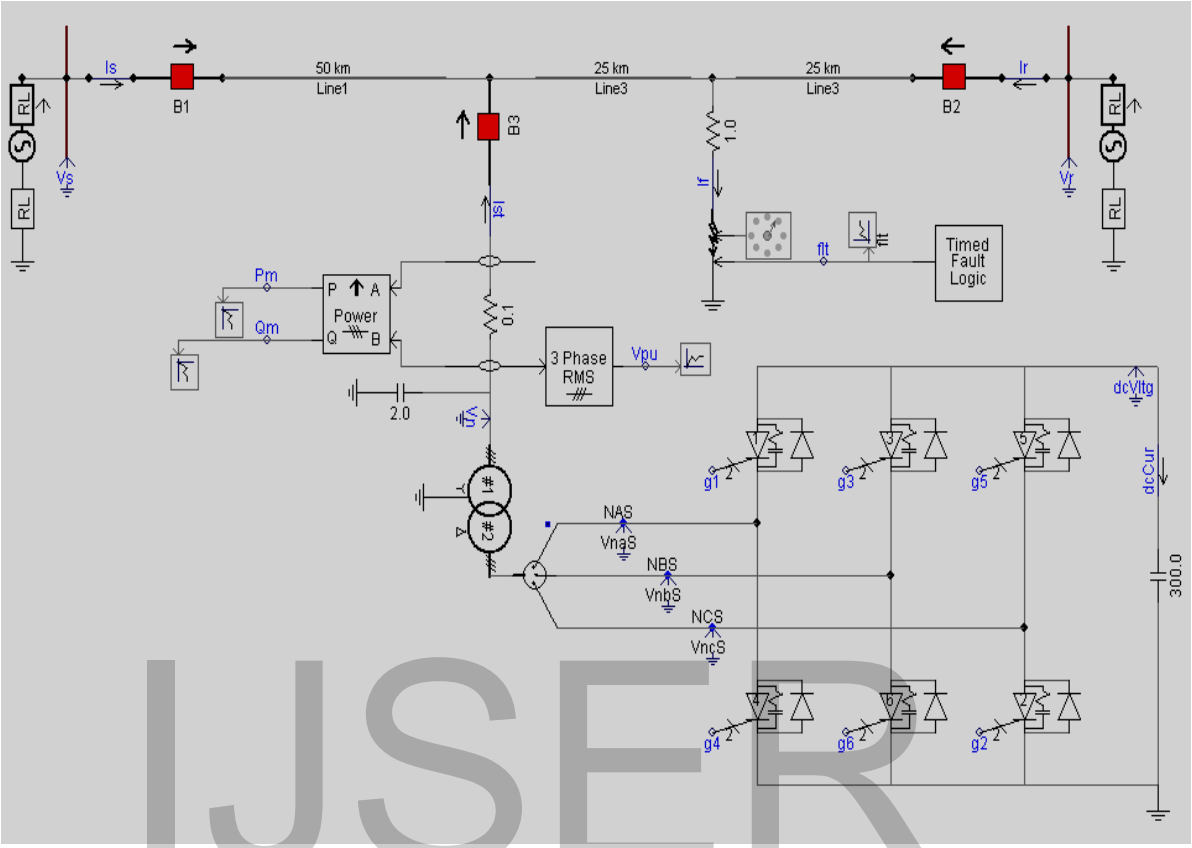

Figure 8.1 Power System with STATCOM at the mid-point

8.2 APPARENT IMPEDANCE CALCULATION

For the analysis associated with the operation of a distance relay, the power system shown in Figure 8.1 is used; the relay is installed on the right side of Bus S. The apparent impedance calculation is based on symmetrical component transformation using power frequency components of voltage and current signals measured at relay point. It is assumed that signal acquisition, preprocessing and sequence component calculations have been performed previously. When a single phase to ground fault occurs at the right side of STATCOM and the distance is $n*L$ from the relay point, the positive, negative and zero sequence networks of the system during the fault can be shown as in fig 8.2, [32].

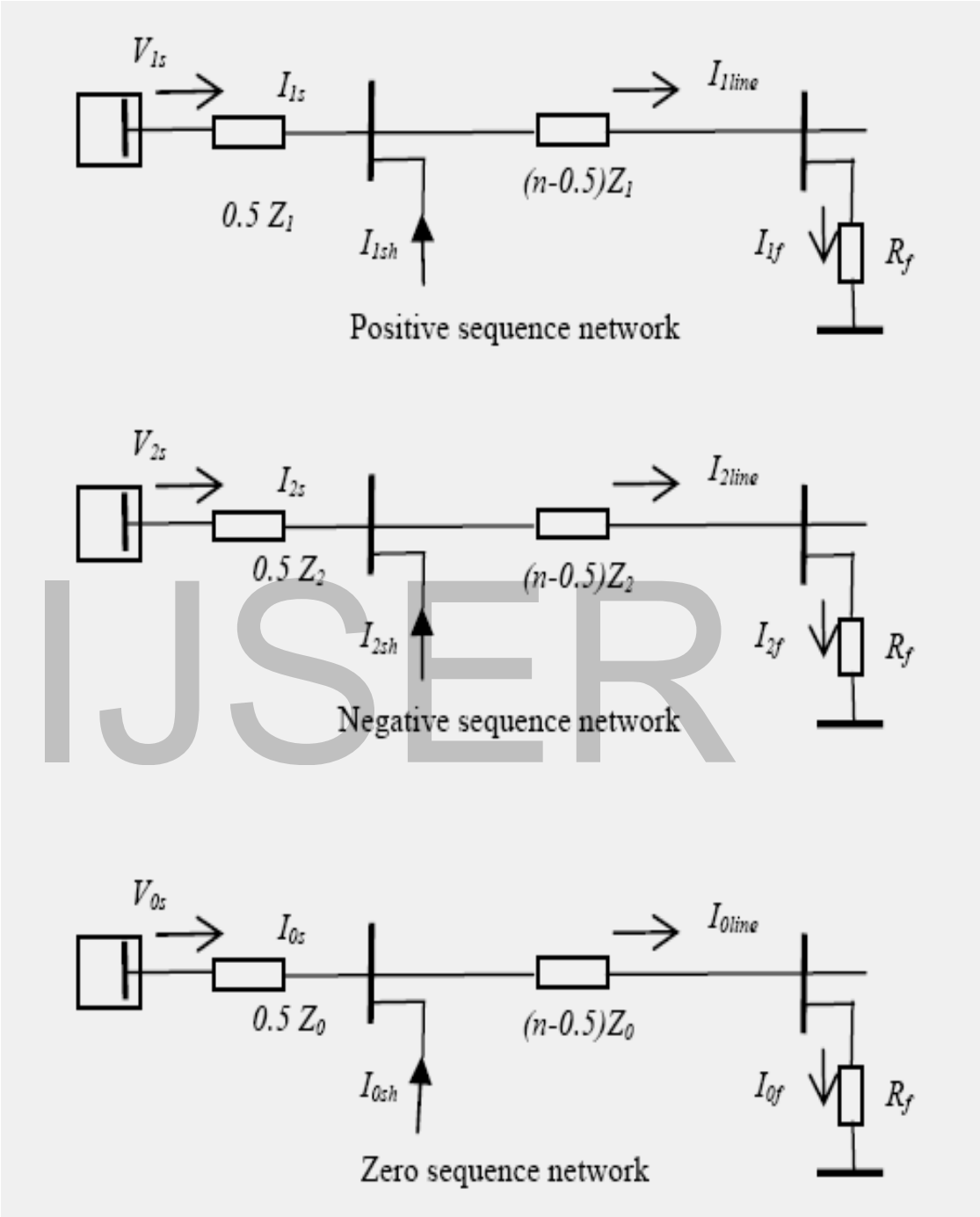

Figure 8.2: The sequence networks of single-phase fault

The sequence voltages at the relay point can be expressed as follows:

$$V_{1s} = I_{1s}0.5Z_1 + I_{1line}(n-0.5)Z_1 + R_f I_{1f} \quad (8.1)$$

$$V_{2s} = I_{2s}0.5Z_1 + I_{2line}(n-0.5)Z_1 + R_f I_{2f} \quad (8.2)$$

$$V_{0s} = I_{0s}0.5Z_0 + I_{0line}(n-0.5)Z_0 + R_f I_{0f} \quad (8.3)$$

$$I_{1line} = I_{1s} + I_{1sh} \quad (8.4)$$

$$I_{2line} = I_{2s} + I_{2sh} \quad (8.5)$$

$$I_{oline} = I_{0s} + I_{0sh} \quad (8.6)$$

Where

V_{1s}, V_{2s} and V_{0s}	are the sequence phase voltages at the relay location,
I_{1s}, I_{2s} and I_{0s}	are the sequence phase currents at the relay location,
I_{1line}, I_{2line} and I_{0line}	are the sequence phase currents in transmission line,
I_{1f}, I_{2f} and I_{0f}	are the sequence phase currents in the fault,
I_{1sh}, I_{2sh} and I_{0sh}	are the shunt sequence phase currents injected by STATCOM
Z_1 and Z_0	are the sequence impedance of the transmission line
n	is the per unit distance of a fault from the relay location

From above, the voltage at relay point can be derived as:

$$V_s = nI_sZ_1 + nI_{0s}(Z_0 - Z_1) + I_{sh}(n-0.5)Z_1 + (n-0.5)I_{sh0}(Z_0 - Z_1) + R_f I_f \quad (8.7)$$

Where

$$V_s = V_{1s} + V_{2s} + V_{0s} \quad (8.8)$$

$$I_s = I_{1s} + I_{2s} + I_{0s} \quad (8.9)$$

$$I_{sh} = I_{1sh} + I_{2sh} + I_{0sh} \quad (8.10)$$

Single phase to ground fault, the apparent impedance of distance relay can be calculated using the equation below:

$$Z = \frac{V_R}{I_R + \frac{Z_0 - Z_1}{Z_1} I_{R0}} = \frac{V_R}{I_{relay}} \tag{8.11}$$

Where

V_R, I_R phase voltage and current at relay point

I_{R0} zero sequence phase current

I_{relay} the relaying current,

If this traditional distance relay is applied to the transmission system with STATCOM, the apparent impedance seen by this relay can be expressed as:

$$Z = \frac{V_s}{I_s + \frac{Z_0 - Z_1}{Z_1} I_{s0}} = \frac{V_s}{I_{relay}} = nZ_1 + \frac{I_{sh}}{I_{relay}}(n - 0.5)Z_1 + \frac{I_{0sh}}{I_{relay}}(n - 0.5)(Z_0 - Z_1) + \frac{I_f}{I_{relay}} R_f \tag{8.12}$$

In practice, one side of the shunt transformer has often a delta connection, so there is no zero sequence current injected by STATCOM, that is to say, $I0sh=0$, and the equation can be rewritten as:

$$Z = nZ_1 + \frac{I_{sh}}{I_{relay}}(n - 0.5)Z_1 + \frac{I_f}{I_{relay}} R_f \tag{8.13}$$

From above we can see that when the traditional distance relay is applied to the transmission system employing STATCOM during the phase to ground fault, the apparent impedance seen by this relay has three parts: the first is positive sequence impedance from the relay point to fault point, which should be the correct value for the distance relay; second is the impact of STATCOM on the apparent impedance and results from the shunt current *Ish* injected by the STATCOM; the last part of apparent impedance is caused by fault resistance. It is clear from equation (14) that if only a solid single phase to ground fault is considered, the equation becomes:

$$Z = nZ_1 + \frac{I_{sh}}{I_{relay}}(n-0.5)Z_1 \tag{8.14}$$

The impact of STATCOM on the apparent impedance can be expressed using the ratio: ***Ish/Irelay***. In the following parts, the location of fault, the location of STATCOM, the setting of STATCOM will be considered. Mho characteristic with a positive sequence voltage polarization is used as zone one distance relay to cover 80% of the transmission line.

8.3 Simulation of Distance Relay with STATCOM at the Mid-point

As it has been seen in chapter 6(simulation of distance relay) and chapter 7(simulation of STATCOM), in this section the same systems being combined to demonstrate of the effects of STATCOM on Distance Relay for single-phase to ground, two phase and three-phase faults applied inside the protected zone of the distance relay, which is the applied faults are behind the STATCOM, so that STATCOM is included in the loop of impedance seen by the distance relay;

8.3.1 PHASE TO GROUND (A_G) FAULT

In the system shown in the figure8.1, an A-phase to ground fault occurs on the right side of STATCOM and the fault distance to relay point is 75km; the setting value in terms of the desired voltage for STATCOM is 1.0pu. The apparent impedance trajectories

of the system with and without STATCOM together with the distance relay mho characteristic are shown in figure 8.3

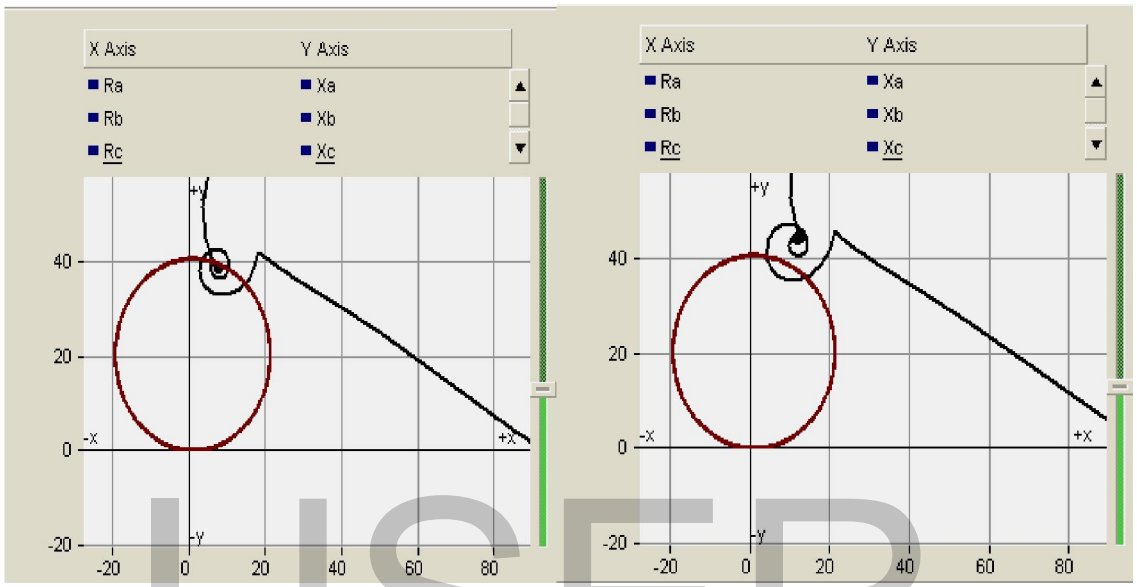

(a) (b)

Figure 8.3 Apparent impedance seen by the relay during A-ground fault (a) without STATCOM (b) with STATCOM

From above, it can be seen that both the resistance and reactance of the apparent impedance of the transmission system with STATCOM are larger than those for the system without STATCOM; the protection zone of the distance relay will thus decrease i.e. it will underreach.

Figure 8.4 show the results of simulation the units of line-line impedance calculation during A-ground fault for both the conditions which are with/ without STATCOM, its clear that only the impedance of the faulted phases will be calculated by relay and never take place in the circle and only the element 'A-ground' of the distance relay will calculated and cross the Mho characteristics.

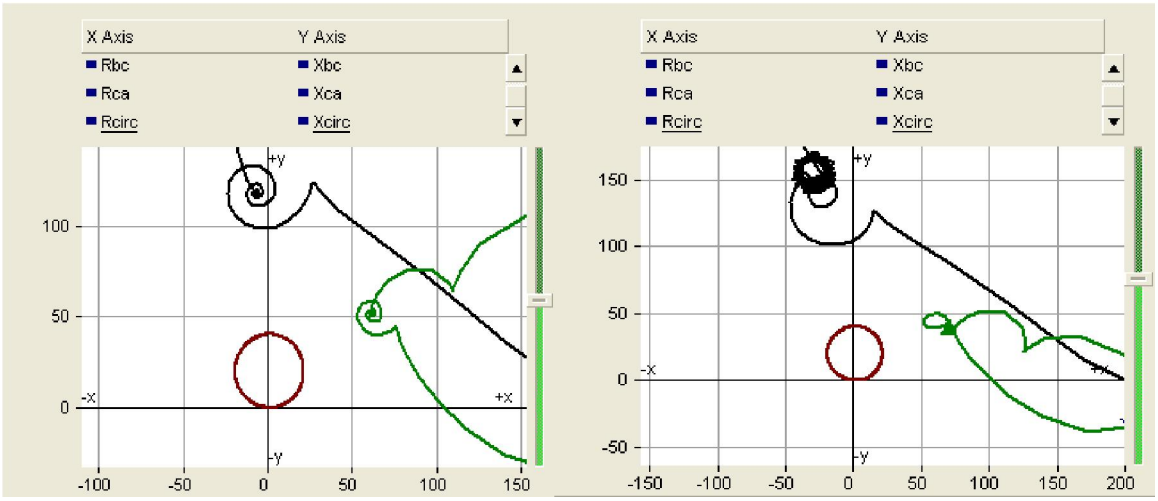

(a) (b)

Figure 8.4 Line-line elements of distance relay during A-ground fault (a) without STATCOM (b) with STATCOM

It is clearly evident that when the fault is on the left side of STATCOM, the apparent impedance seen by the distance relay is almost identical to that for the system without STATCOM. However when the fault is on the right side of STATCOM, both the apparent resistance and reactance of the system with STATCOM are larger than that for the system without STATCOM. this can be explained by the $I_{sh\ relay} / I_{ratio}$ (influence ratio), because of the reactive power injection by STATCOM, the voltage at the STATCOM connecting point is higher compared to the system without STATCOM; in other words, seen by the distance relay the fault is further than its real distance, duo to an increase in the apparent impedance, this would lead to the under-reaching of distance relay. The influence ratio increases with an increase in the location of the fault; this can be explained by the fact that when the fault is further away from the relay point, the relay current and STATCOM injecting current will decrease, but the variation in relay current is bigger than that of the injected current. When the STATCOM is installed in the middle of the transmission line, and the original distance relay's reach is set of 80% then, the reach point ***Nnew*** for the system with STATCOM can be derived from following:

$$50\%.Z_1 + (N_{new} - 50\%)(1 + I_{sh} / I_{relay})Z_1 = 80\%.Z_1$$

$$N_{new} = 50\% + \frac{30\%}{1 + I_{sh} / I_{relay}}$$

According to different system conditions, STATCOM may have different setting values for desired voltage, and this setting will also affect the performance of the distance relay. The next study shows the apparent impedance and during a single phase to ground when the STATCOM settings are 1.2, 1.0 and 0.8 pu respectively.

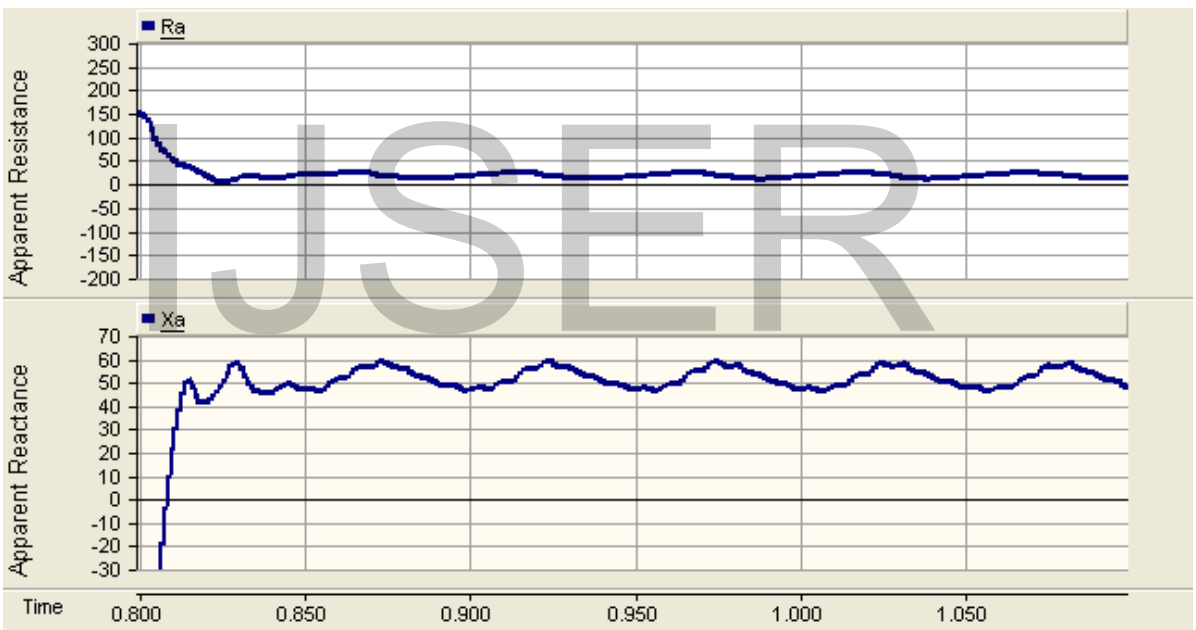

Figure 8.5 (a) Apparent resistance (b) Apparent reactance; when the setting of STATCOM is 1.2 pu.

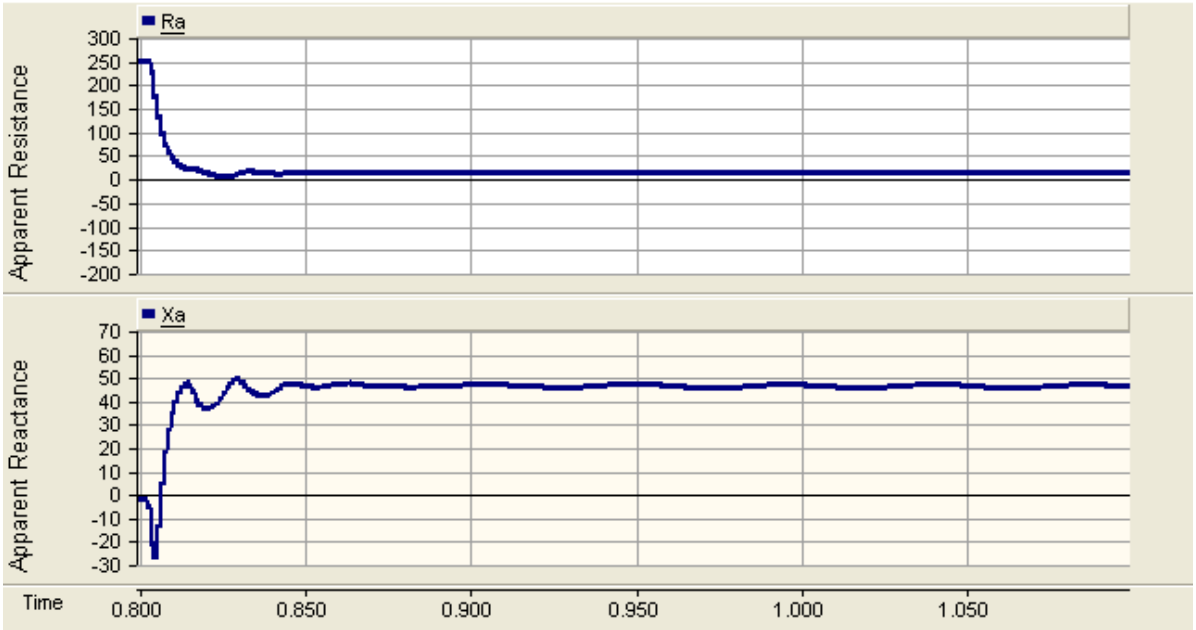

Figure 8.6 (a) Apparent resistance (b) Apparent reactance; when the setting of STATCOM is 1.0 pu.

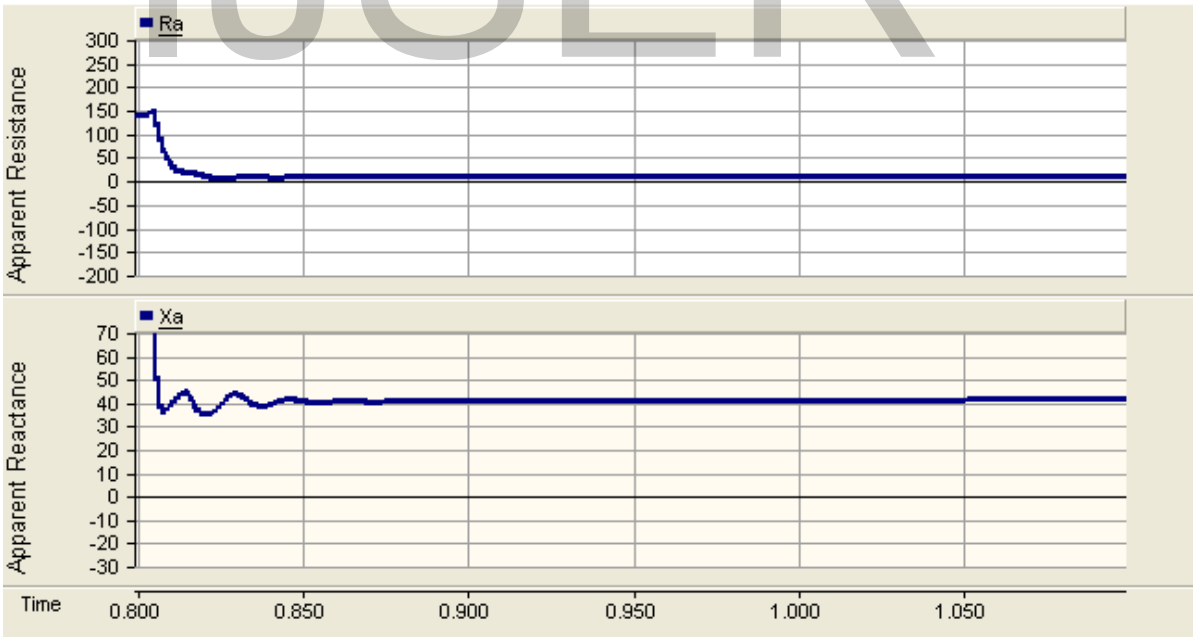

Figure 8.7 (a) Apparent resistance (b) Apparent reactance; when the setting of STATCOM is 0.8 pu.

As seen from the figures 8.5, 8.6 and 8.7, both the apparent resistance and reactance seen by the distance relay for a single phase to ground fault will increase with the increase of

STATCOM setting reference voltage. This can be explained by the different reactive power injection. When the setting voltage is high, as seen from figure 9 during the fault, to keep the higher desired voltage, the STATCOM will inject more reactive power; in other words, the reactive current injection of STATCOM *Ish* is high; this will increase the influence ratio, according to equation (14) and the apparent impedance seen by the distance relay will increase.

It is worth mentioning that for certain conditions, when the system capacity is high and the STATCOM voltage setting value is low, if a single phase-ground fault occurs outside zone 1, the STATCOM connecting point voltage may be higher than the setting value, in this case the STATCOM will absorb reactive power in the system, the current *Ish* will become inductive, the influence ratio ***Ish/Irelay*** will become negative rather than positive and the apparent impedance seen by the distance relay will decrease compared to the system without STATCOM. This may lead to over-reaching of distance relay, and this is clearly undesirable.

8.3.2 PHASE TO PHASE (B-C) FAULT

For a phase to phase fault, the relay voltage input is line-to-line voltage and the current is delta line current. Figure 8.8 show the apparent impedance seen by distance relay during a B-C phase fault. The relay voltage is V_{BC} and relay current is I_{BC}. The fault is 75km from relay point and the STATCOM setting value is 1.0pu. As can be seen from figure 8.8, during a phase to phase fault, because of the STATCOM, the apparent reactance increases, but unlike the single phase to ground fault, the apparent resistance decreases and hence the distance relay can not operate properly.

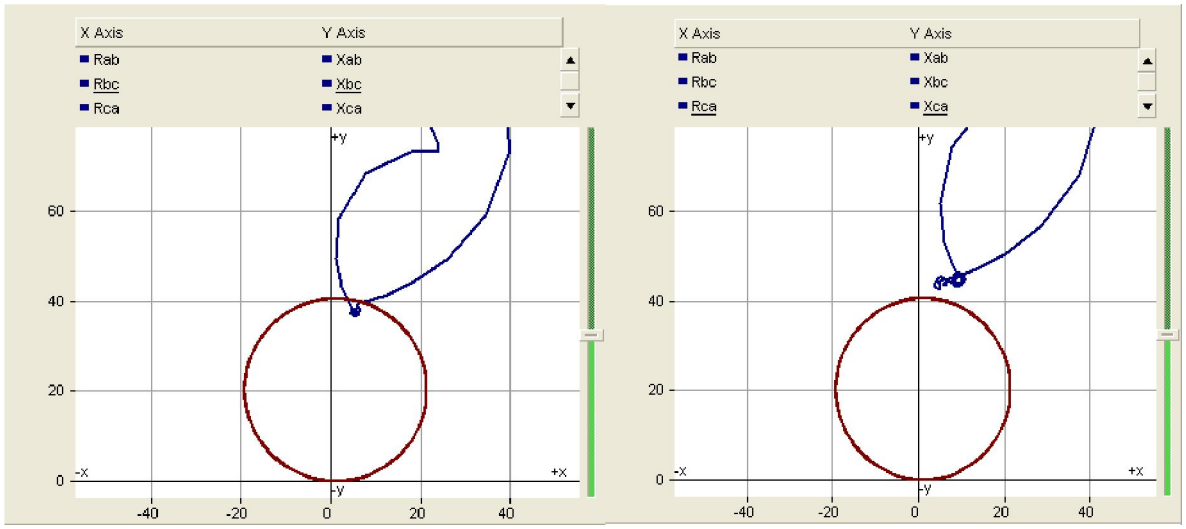

(a) (b)

Figure 8.8 Apparent impedance seen by distance relay during B-C fault (a) without STATCOM (b) with STATCOM

8.3.3 THREE-PHASE (ABC) FAULT

The same system has been tested for the three-phase faults and the apparent impedance seen by the distance relay located at the sending-end for the cases with and without STATCOM which is the fault applied inside the protected zone of the relay, the effect of the STATCOM under fault conditions for the cases with the STATCOM disconnected as well as STATCOM connected are also illustrated in Figs 8.6 (a) and (b).

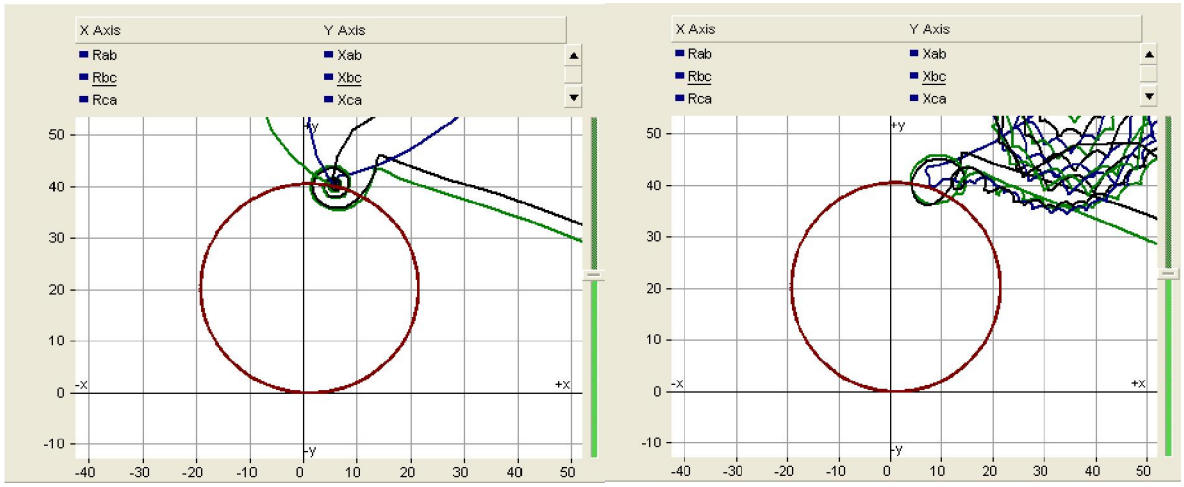

(a) (b)

Figure 8.6 Apparent impedance seen by distance relay during Three-phase fault (a) without STATCOM (b) with STATCOM

8.3.4 RESULTS OF SIMULATION

From above simulation results, the following conclusions can be drawn:

1. During a fault, the apparent impedance will increase if the STATCOM supplies reactive power to the system, the apparent impedance will decrease if the STATCOM consumes reactive power from the system.
2. The influence ratio will increase with an increase in location of the fault.
3. The distance relay wills under-reach when the STATCOM supplies the reactive power, and will over-reach when the STATCOM consumes the reactive power.
4. The setting of STATCOM has a big impact on the apparent impedance. The higher the voltage setting is, the larger the apparent impedance will be.
5. During a phase to phase fault, the apparent reactance increases but the apparent resistance may decrease
6. During a phase to phase fault, if the quadrilateral characteristic is used as the relay boundary, the healthy phase relay may not function correctly.
7. The position of distance relay has a big impact on the relay performance.

9

CONCLUSIONS AND FUTURE SCOPE

9.1 Conclusion

A calculation procedure of the apparent impedance of system with STATCOM during single phase to ground fault is outlined. The simulation results show clearly the impact of STATCOM on distance relay performance. The apparent impedance is influenced by the lever of reactive power injected by the STATCOM resulting in either under reaching or over reaching of the distance relay.

Three installation positions have been considered for the STATCOM; at the near end bus, at the mid-point of the line, and at the remote end bus. For the installation at the mid-point, the measured impedance at the relaying point is evaluated. This impedance depends on the controlling parameters of STATCOM, as well as the system operational and structural conditions. In the cases of installation of STATCOM at the line ends buses, STATCOM is not present in the fault loop. When STATCOM is installed at the mid-point, if the fault locates between the relaying point and the mid-point, in this case STATCOM is not present in the fault loop; otherwise STATCOM would be included in the fault loop. When STATCOM is not present in the fault loop for zero fault resistance, the measured impedance is equal to the actual impedance of the line section between the relaying and fault points. On the other hand, when STATCOM involves in the fault loop, even in the case of zero fault resistance, the measured impedance would be deviated from its actual value. Therefore, when STATCOM is installed at the line ends, the conventional distance relays operation would be acceptable, but when STATCOM located at the mid-point of the transmission line, the conventional distance relays are exposed to the mal-operation, in the form of over-reaching or under-reaching. In this case, the effect of STATCOM on the protective zones should be considered. Since deviation of the measured impedance is not constant, because of the varying parameters of STATCOM, adaptive methods should be utilized.

9.2 Future Scope

To investigate

10. BIBILIOGRAPHY

[1] J.L.J. Lewis Blackburn, Protective Relaying Principles and Applications. New York: Marcel Dekker, 1987.

[2] S.H. Horowitz, A.G. Phadke, and J.S. Throp, "Adaptive transmission system relaying," IEEE Trans. Power Delivery, vol.3, pp. 1436-1445, Oct. 1988.

[3] G.D. Rockefeller, C. L.Wagner, and J.R. Linders, "Adaptive transmission relaying concepts for improved performance," IEEE Trans. Power Delivery, vol.3, pp. 1446-1458, Oct.1988.

[4] A.K Jampala, S.S. Venkata, and M.J. Damborg, "Adaptive transmission protection: concepts and computational issues," IEEE Trans. Power Delivery, vol.4, pp. 177-185, Jan.1989.

[5] B.Chattopadhyay, M.S. Sachdev, and T.S. Sidhu, "Protection of a distribution network-an adaptive approach," Can.J.Electr. Comput.Engg. vol.19, no.3, pp. 99-108, July 1994.

[6] M.S. Sachdev, T.S. Sidhu, and B.K. Talukdar, "Topology detection for adaptive protection of distribution networks," in Proc. IEEE Energy Manage. Power Delivery, 1995, pp. 445-450.

[7] N. G. Hingorani and L. Gyugyi, "Understanding FACTS Concepts and Technology of Flexible AC Transmission Systems", IEEE Press, 2000

[8] Y. H. Song and A. T. Johns, Flexible AC Transmission Systems, IEE Press, 1999.

[9] M. Adamiak and R.Patterson, "Protection requirements for flexible AC transmission system," in Proc.CIGRE, Paris, France 1992

[10] Schauder. C. er al, "AEP UPFC project: installation, commissioning and operation of the ±160 MVA STATCOM (phase I)", Power Delivery, IEEE Transactions on , Volume: 13 , Issue: 4 , Oct. 1998 Pages:1530 – 1535

[11] K. El-Arroudi, G. Joos, D.T. McGillis, "Operation of impedance protection relays with the STATCOM," Power Delivery, IEEE Transactions on , Volume: 17 , Issue: 2 , April 2002 Pages:381 - 387.

[12] P.K. Dash., , A.K. Pradhan, , G. Panda, , A.C. Liew, "Adaptive relay setting for flexible AC transmission systems (FACTS) ," Power Delivery, IEEE
Transactions on , Volume: 15 Issue: 1 , Jan 2000 Page(s): 38 -43

[13] W. G. Wang; X.G. Yin; J. Yu ; X.ZH Duan; D.SH Chen "The impact of TCSC on distance protection relay," Power System Technology, 1998. Proceedings. POWERCON '98. 1998 International Conference on , Volume: 1 , 18-21 Aug. 1998

[14] M, Khederzadeh "The impact of FACTS device on digital multifunctional protective relays," Transmission and Distribution Conference and Exhibition 2002: Asia Pacific. IEEE/PES , Volume: 3 , 6-10 Oct. 2002 Pages:2043 - 2048 vol.3

[15] Mojtaba Khederzadeh, "The Impact of FACTS Devices on digital Multifunctional Protective relays", Transmission and Distribution Conference and Exhibition 2002, Asia Pacific,. IEEE/PES, Volume: 3, 6-10 Oct.2002, Pages: 2043-2048.

[16] T.S.Sidhu, Rajiv.K.Varma, Pradeep K.Gangadharan, Fadhel A. Albasri, G.Rosas Ortiz, "Performance of Distance relays on shunt FACTS compensated Transmission lines",.-Power delivery, IEEE Transactions on July 2005,volume20,Issue-3,Pgs- 1837 -1845 ISSN:0885 8977.

[17] E. Uzunovic, C. A. Ca˜nizares, J. Reeve, Fundamental Frequency Model of Static Synchronous Compensator, in: Proc. North American Power Symposium (NAPS), 1997, pp. 49–54, Laramie, Wyoming.

[18] C. Schauder, M. Gernhardt, E. Stacey, T. Lemak, L. Gyugyi, T. W. Cease, A. Edris, Development of a ±100 MVAr Static Condenser for Voltage Control of Transmission Systems, IEEE Trans. Power Delivery 10 (3) (1995) 1486–1493.

[19] Modeling of Power Electronics Equipment (FACTS) in Load Flow and Stability Programs: A Representation Guide for Power System Planning and Analysis, Technical brochure no. 145, TF 38-01-08, CIGRE (Aug. 1999).

[20] P. K. Steimer, H. E. Gruning, J. Werninger, E. Carrol, S. Klaka, S. Linder, IGCT-A New Engineering Technology for High Power, Low Cost Inverters, IEEE Industry Applications Magazine (1999) 12–18.

[21] S. H. Horowitz, A. G. Phadke, J. S. Thorp, "Adaptive Transmission System Relaying," *IEEE Trans. Power Delivery*, vol. 3, no. 4, 1436-1445, 1988.

[22] G. D. Rockefeller, C. L. Wagner, et al, "Adaptive Transmission Relaying Concepts For Improved Performance," *IEEE Trans. Power Delivery*, vol. 3, no. 4, 1446-1458, 1988.

[23] Chul-Hwan Kim, *Member; IEEE,* Myung-Hee Lee, Raj K. Aggarwal, *Senior Member: IEEE,* and Allan T. Johns, ***Senior*** *Membel; IEEE,* "Educational Use of EMTP MODELS for the Study of a Distance Relaying Algorithm for Protecting Transmission Lines"

[24] Khalil El-Arroudi, Geza Joos, and Donald T. McGillis, "Operation of Impedance Protection Relays With the STATCOM", IEEE TRANSACTIONS ON POWER DELIVERY, VOL. 17, NO. 2, APRIL 2002

[25] A. Kazemi, S. Jamali, *Fellow, IEE*, and H. Shateri, *Member, IEE* . "Effects of STATCOM on Distance Relay Tripping Characteristic ". 2005 IEEE/PES Transmission and Distribution Conference & Exhibition: Asia and Pacific Dalian, China.

[26] A. Girgis, A. Sallam, and A. K. El-Din, "An adaptive protection scheme for advanced series compensated (ASC) transmission lines," *IEEE Trans. Power Del.*, vol. 13, pp. 414–420, Apr. 1998.

[27] L. Gyugyi, "Fundamentals of thyristor-controlled STATIC VAR compensators in electric power system applications," in *Proc. Workshop Static Compensators at IEEE Winter Meeting*, New Orleans, LA, 1987.

[28] E. Larsen *et al.*, "Basic aspect of applying SVCs to series-compensated AC transmission lines," *IEEE Trans. Power Del.*, vol. 5, pp. 689–686, July 1990.

[29] L. Gyugyi, "Dynamic compensation of AC transmission lines by solidstate synchronous voltage sources," *IEEE Trans. Power Del.*, vol. 9, pp. 904–911, Apr. 1994.

[30] C. Schauder *et al.*, "Development of a 100 MVAR static condenser for voltage control of transmission systems," *IEEE Trans. Power Del.*, vol. 10, pp. 1486–1496, July 1995.

[31] *EMTDC/PSCAD Simulation Software, Ver. 3.04*, 1999.

[32] X.Y Zhou, H.F Wang, R.K Aggarwal, P.Beaumont*, "THE IMPACT OF STATCOM ON DISTANCE RELAY". 15th PSCC, Liege, 22-26 August 2005.

11

APENDIX

11.1 *Appendix (A)*; The Related parameters of the simulated transmission system

Voltage Rating: 345 kV

System frequency: 60 Hz

Equivalent Voltage Per Unit:

$E_S = 1\angle 15^\circ$ (p.u.) , $E_R = 1\angle 0^\circ$ (p.u.)

Equivalent Source Impedance:

$Z_{S1} = 0.238 + 5.72(\Omega)$, $Z_{S0} = 2.738 + 10(\Omega)$

$Z_{R1} = 0.238 + 6.19(\Omega)$, $Z_{R0} = 0.833 + 5.12(\Omega)$

Length of Transmission Line: 100 km

Line Constant:

$R_0 = 0.275(\Omega)$, $L_0 = 3.725(mH)$, $C_0 = 6.711(nF)$

$R_1 = 0.0275(\Omega)$, $L_1 = 1.345(mH)$, $C_1 = 9.483(nF)$

Filter:

2 Order of Butterworth Low Pass Filter • •High Cut-Off Frequency 360(Hz)

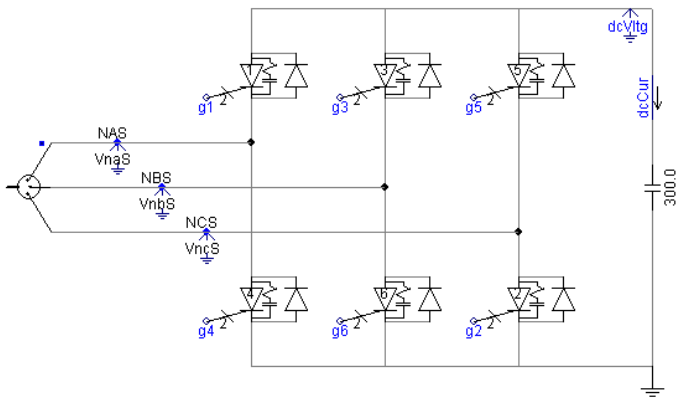

$$V_{1s} = I_{1s}\, 0.5Z_1 + I_{1line}\,(n - 0.5)\, Z1 + R_f I_{1f} \qquad (2)$$

$$V_{2s} = I_{2s}\, 0.5Z_1 + I_{2line}\,(n - 0.5)\, Z1 + R_f I_{2f} \qquad (3)$$

$$V_{0s} = I_{0s}\, 0.5Z_0 + I_{0line}\,(n - 0.5)\, Z0 + R_f I_{0f} \qquad (4)$$

$$I_{1line} = I_{1s} + I_{1sh} \qquad (5)$$

$$I_{2line} = I_{2s} + I_{2sh} \qquad (6)$$

$$I_{0line} = I_{0s} + I_{0sh} \qquad (7)$$

$$V_s = nI_sZ_1 + nI_{0s}\,(Z_0 - Z_1) + I_{sh}\,(n - 0.5)\, Z1 + (n - 0.5)\, I_{sh0}\,(Z_0 - Z_1) + R_f I_f \qquad (8)$$

$$V_s = V_{1s} + V_{2s} + V_{0s} \qquad (9)$$

$$I_s = I_{1s} + I_{2s} + I_{0s} \qquad (10)$$

$$I_{sh} = I_{1sh} + I_{2sh} + I_{0sh} \qquad (11)$$