ISSN 2229-5518

Enhancement of Reactive Power Compensation with DSTATCOM Inverter and MMC Technology Using Solar Photovoltaic Power

S.Amudha, Dr.C.Kumar

Abstract— This paper presents the design of the Distribution Static Compensator (DSTATCOM) a shunt connected device and inverter with Modular Multilevel Converter (MMC) topology into a single unit without any additional cost known as D-STATCOM INVERTER. When the source is connected to a nonlinear load, the generation of reactive power in the line is increased. In order to enhance the active power and to reduce the reactive power D-STATCOM along with INVERTER is used here. Active power required is obtained from solar which enhances the reactive power compensation. The MMC topology is a new type of Voltage Source Converter (VSC) for Medium or High-Voltage DC power transmission and other applications such as connecting renewable resources to grids. This inverter is used to control the active power Modulation Index and reactive power by using the phase angle. This inverter is placed between the grid and solar power to control the reactive and active power. This inverter provides utilities with more knowledge at end points of the distribution lines which is a cost-effective inverter and has a capability to regulate active and reactive power on distribution systems. Simulations of the D-STATCOM inverter, with 5 levels, have done by using MATLAB/Simulink.

Index Terms— Carrier based Pulse Width Modulation (CPWM), Distribution Static Compensator (DSTATCOM), Modular Multilevel Converter (MMC), Grid Connected, Solar Photovoltaic (PV) Power.

1 Introduction

THE utility has more concerned about the power quality issues.Electric Power quality is at rated magnitude and frequency it maintains a sinusoidal power distribution in bus voltage.And also,the energy supplied to a customer must be uninterrupted from the reliability point of view.The majority of power consumption has been drawn in reactive loads such as fans and pumps etc.These loads draw lagging power factor currents in the distribution systems.These excessive reactive power demand increases feeder losses and reduces the active power flow capability of the distribution system which also affects the voltage profile.

Nowadays,it is well known fact known sources of fossil fuels in the world are depleting very fast and by the turn of the century,man will have to increasingly depend upon the renewable resources of energy.A renewable energy system offers several advantages over conventional energy sources.They are clean,pollution free,eco-friendly,no green house gas emissions and health hazards.Solar energy has the greatest potential of all the sources of renewable energy and if only a small amount of this form of energy can be used and also it is one of the most important suppliers of energy especially when other sources in the form of radiation,can be converted directly or indirectly into other forms of energy,such as heat and electricity,which can be utilized by man.

Author
- *S.Amudha ,PG Scholar,M.E. (Power System Engineering), S.K.P Engineering College, Tiruvannamalai, Tamilnadu, India. E-mail: ammu.thilagam@gmail.com*

Co-Author
- *Dr.C.Kumar, Academic Director, S.K.P Engineering College, Tiruvannamalai, Tamilnadu, India. E-mail: drchkumararima@gmail.com*

Power electronics device increase the reliability and quality of power supplied to the customers.Nowadays, with recent developments in semiconductor technologies, power electronics devices are mostly used in the power system to control the active and reactive power flow.Power electronics provides more flexibility and control power systems at both transmission and distribution sides.Among all power quality concerns,controlling active and reactive power transferring to or from the grid requires more attention.

Power electronics based FACTS(Flexible Alternating Current Transmission System) devices have been developed in order to provide more knowledge and control on power systems.The FACTS devices have greater control of power systems, very fast power swing damping and power transmission lines securely loaded up to their thermal limits.Traditionally for a reactive power control on a power grid capacitor bank are used.With the power electronics based FACTS devices in power system,the STATCOM have been used in recent days.

This paper presents the design of a DSTATCOM inverter for renewable energy systems using Modular Multilevel Converter (MMC) topology.The aim of the work is to design a new type of Inverter with FACTS capabilites to provide utilities with more knowledge about the distribution systems,specifically on end points.The inverter is placed between the renewable energy source,specifically a solar power,and the distribution grid in order to regulate the active and reactive power required by the grid.This inverter is capable of controlling its Phase Angle and Modulation Index,respectively.The unique contribution of the proposed work is to combine the two concepts of inverter and DSATCOM using a Novel Voltage Source Converter(VSC) Modular Multilevel Converter (MMC) Topology in a single unit without any additional cost.

ISSN 2229-5518

2 Grid Connected to Photovoltaic

In PHOTOVOLTAIC SYSTEM S, a grid connected inverter converts the DC output voltage of the solar modules into the AC system.Here the DSTATCOM inverter converts the DC output voltage of the solar modules into the AC system.The grid-connected Photovoltaic System extracts Maximum Power Point Tracking (MPPT) Technique is usually associated with a DC-DC converter.The DC-AC injects the sinusoidal current to the grid and controls the power factor.An important aspect related to the Photovoltaic System connected to the electric grid when there is little or no solar radiation.That is important for compensating the reactive power at peak hours,when the main grid needs an amount of reactive power higher than average consumption.

In this inverter control strategy is not capable to control the active power, but also dynamically reconfigured to change the magnitude of the reactive power injected into the grid.Some solutions are proposed to obtain a high reliability inverter.The basic idea of the proposecontrol is to obtain a low cost and simple controller.In this method, the active power is controlled by Load Angle and the reactive power is controlled by the inverter output voltage magnitude.The controller feeds maximum active power into the grid at unity power factor,whereas it also allows the adjustment of reactive power fed into the grid.

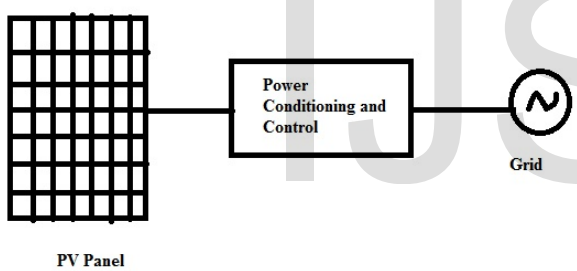

Fig. 1. Grid Connected to PV System

3 Modular Multilevel Converter (MMC)

For high power electronics applications, modular converters will greatly reduce the engineering development cost.Power Electronics Building Block (PEBB) H-Bridge Building Blocks (HBBB) are possible modular converters that could be easily reconfigured to various applications.The Cascaded Multilevel Converter is the most using modularized topology.Besides its modularity,it has also a lot of advantages as following.

- Least number of components compared with other multilevel topologies
- Easy expansion
- Easy to achieve higher power ratings
- Easy to add redundancy

In order to find dimensioning factors of a Modular Multilevel Converter (MMC), an understanding of its basic operating principles is essential.The schematic of one phase leg of the Modular Multilevel Converter and its sub-Module(SM) is shown in Fig.2.Each phase leg consists of two arms, one upper arm and one lower arm, connected in series between the DC terminals.The AC terminal is located at the midpoint between the two arm as shown in Fig.2.Each arm consists of one arm inductor and N series connected half-bridges with DC capacitors,termed SM's(Sub-Module).[6-12].The number of output voltage levels m in a cascade inverter is defined by,

$$m=2M+1$$

Where M is the number of separate DC sources required.

The resistive losses in the converter are modelled as resistors with the resistance R connected in series with each arm inductor.The purpose of the arm inductors is to limt parasitic currents and fault currents.In order to limit the parasitic current, the required arm inductors are typically very small.However, in grid applications, the arm inductors may be in the range of 0.1 p.u. in order to limit fault currents.

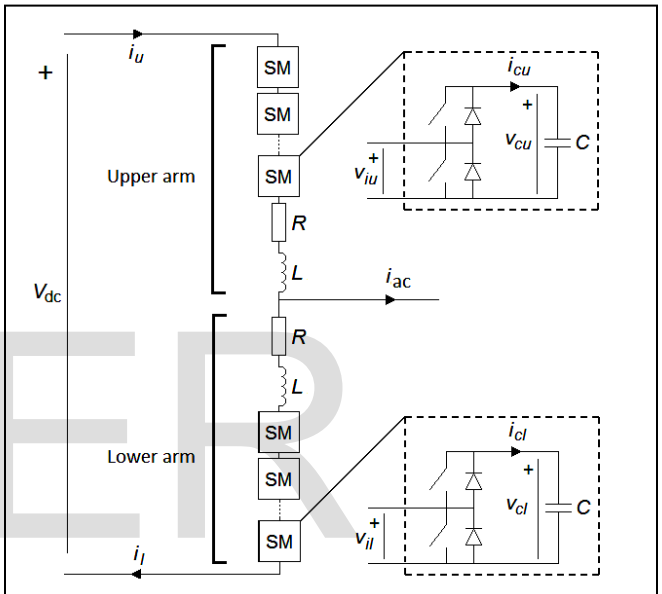

Fig. 2. One phase leg of the Modular Multilevel Converter and its Sub Module

The converter is controlled in such a way that the voltages across the Sub-Module capacitors are kept approximately constant.In this way that the capacitors act as voltage sources that can be inserted and bypassed in the chain series connected sub modules.Consequently, each arm can generate an N+1 level voltage waveform.The voltage across each chain of series connected sub modules is referred to as inserted voltage.Ideally, each arm inserts an alternating voltage with a DC offset.

4 DSTATCOM

When the STATCOM is applied in the distribution system is called DSTATCOM is a shunt compensated device which is generally used to solve power quality problems in distribution systems.It is used in correcting power factor,maintaining constant distribution voltage and mitigating harmonics in a distribution network.

The DSTATCOM is designed with GTO or IGBT based Voltage Sourced Converter connected to the power system via multi-stage converter transformer.A DSTATCOM is a controlled reactive source, which includes a VSC and a DC link

ISSN 2229-5518

Capacitor connected in shunt, capable of generating and/or absorbing reactive power.The operating principles of a DSTATCOM are based on the exact equivalence of the conventional rotating synchronous compensator [13-15].

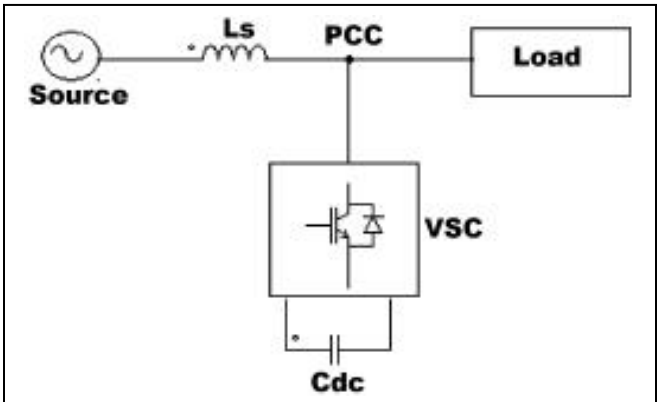

Fig. 3. DSTATCOM

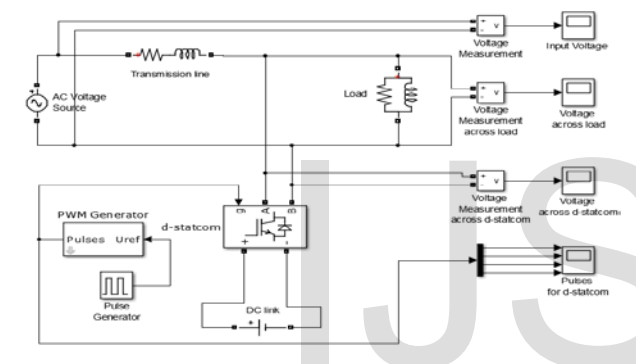

Fig. 4. Simulation Diagram of DSTATCOM

5 Carrier Based PWM Generator

The natural sampling techniques for a Multilevel Inverter are categorized into two and they are:

- Single Carrier Sinusoidal PWM (SCSPWM)
- Multi Carrier PWM (MCPWM)

Multi carrier PWM is an exclusive control strategy for multi-inverters and has further classifications as discussed below.Several multicarrier techniques have been developed to reduce the distortion of outputs in multilevel inverters based on the classical SPWM with triangular carriers.

The constant switching frequency Pulse Width Modulation (PWM) technique is most popular and is a very simple switching scheme.For m-level inverter, m-1 carriers with the same frequency fc and the same amplitude AC are disposed such that bands they occupy are contiguous.The reference waveform has peak to peak amplitude A_m, the frequency f_m and it is zero centered in the middle of the carrier set.The reference is continuously compared with each of the carrier signal,then the active device corresponding to that carrier is switched off.

Carrier based PWM methods have more than one carrier that can be triangular waves or saw tooth waves and so on.As far as the Particular carrier signals are concerned,there are multiple CFD(Control Freedom Degree) including frequency,amplitude,phase of each carrier and offsets between carriers and as in three phase circuits,the injected zero sequence signal to the reference wave.Therefore multilevel carrier based PWM methods can have multiple CFD.These CFD combinadded with the basic topologies of multilevel invrters will produce many multilevel carrier based PWM strategies.

6 DSTATCOM Inverter

When the source is connected to a non-linear load, the generation of reactive power in the line is increased.In order to enhance the active power and to reduce the reactive power DSTATCOM along with INVERTER is used here.This combination is achieved by introducing an MMC.Active power required is obtained from Solar Photovoltaic.And the output is fed into the DSTATCOM inverter.This inverter is designed to control the flow of active and reactive power between the solar and the grid.It is able to provide utilities with distributive control of VAR compensation and Power Factor on feeder lines[15].

To enhance the reactive power control of the proposed inverter, it is equipped with additional DSTATCOM option.The steady stae operation of the DSTATCOM inverter is controlled by adjusting Modulation Index and Phase Angle,so that it provides the desired amount of active power and reactive power compensation.The Modulation Index is used to control the active power while the power angle is used to control the reactive power transferring between the solar and the grid.It has two modes of operation.They are-

- When active power is gained from the Solar Power, which is called INVERTER mode.
- When no active power is gained from the Solar Power, which is called DSTATCOM mode.

The Active and Reactive Power Flow of the DSTATCOM is as follows:

$$P_S = \frac{m\, E_S\, E_L}{X} \sin\delta$$

$$Q_S = \frac{m\, E_S\, E_L}{X} \cos\delta - E_L^{\,2}$$

Where P_S , Q_S , E_S, E_L, δ, m and X are the Active Power Supply, Reactive Power Supply, Voltage of DSTATCOM, Line Voltage, Power Angle, Modulation Index and Inductance between the inverter and grid respectively.

7 Simulation Result

To maintain the SM capacitor voltages balanced, a Carrier Based PWM (CPWM) method is used to control the voltages of the capacitors.For a 5-level MMC inverter, this technique requires four in-phase carriers that are displaced with respect to the zero axis.The output volage level is determined by comparing a sinusoidal signal reference with these four carriers.With a 5-level inverter,at each instant four SM's should be chosen based on their capacitor voltages considering the direction of the current.Depending on the output voltage level,if the current is positive,the SM capacitors are being charged,and therefore a number of SM's with lowest capacitor voltage should be chosen.Likewise,if the current is negative,the SM

ISSN 2229-5518

capacitors are being discharged,and therefore a number of SM's with highest capacitr voltage should be chosen.

Generally, when the output voltage of a SM is equal to zero, it is called off and when the output voltage of a SM is equal to its capacitor voltage, it is called on.The number of required SM's for each voltage level is as shown in TABLE 1.The simulation diagram of DSTATCOM Inverter is shown in Fig.5.By using the DSTATCOM Inverter we get the same input and

TABLE 1
SIMULATION RESULT OF MODULAR MULTILEVEL CONVERTER

Level	Output Voltage V_o	ON	OFF
Level 1	$V_o = -V_{dc} / 2$	4 upper SM's	4 lower SM's
Level 2	$V_o = -V_{dc} / 4$	3 upper SM's & 1 lower SM's	3 lower SM's & 1 upper SM's
Level 3	$V_o = 0$	2 upper & 2 lower SM's	2 upper & 2 lower SM's
Level 4	$V_o = V_{dc} / 4$	1 upper & 3 lower SM's	3 upper & 1 lower SM's
Level 5	$V_o = V_{dc} / 2$	4 lower SM's	4 upper SM's

V_o = Output Voltage, V_{dc} = DC Voltage; SM= Sub-Module

output voltages without anyloss as shown in Fig. (6-7).the mmc output voltage, real power, reactive power, power factor,FFT Analysis are shown in Fig.(8-11).

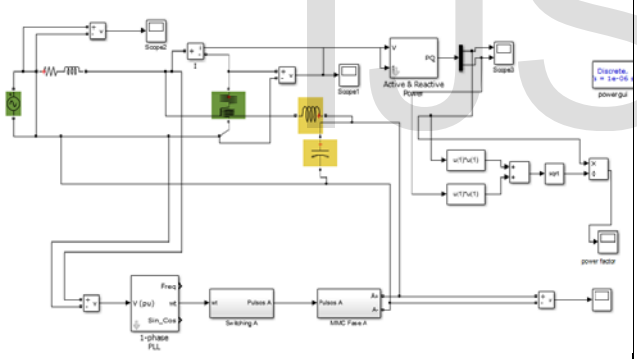

Fig. 5. Overall Simulation Diagram of DSTATCOM Inverter

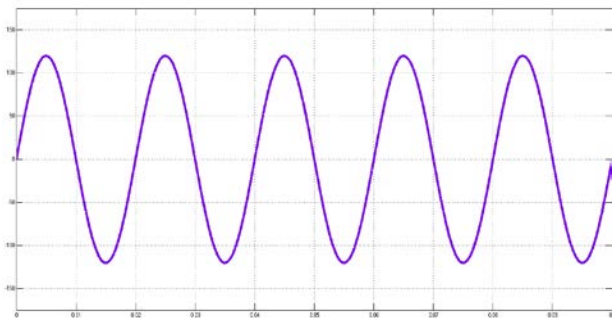

Fig. 6. Input Voltage of DSTATCOM Inverter (Voltage Vs Time)

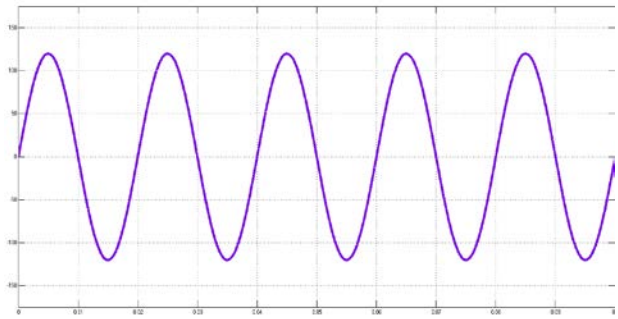

Fig. 7. Output Voltage of DSTATCOM Inverter (Voltage Vs Time)

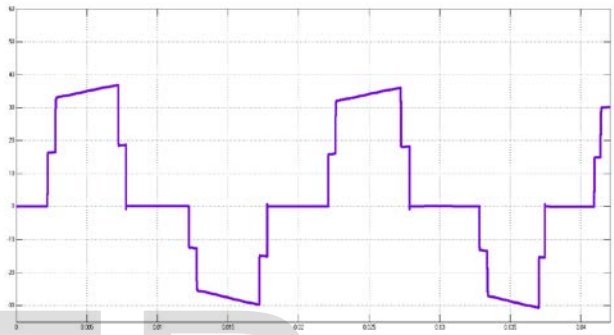

Fig. 8. Output Voltage of MMC (Voltage Vs Time)

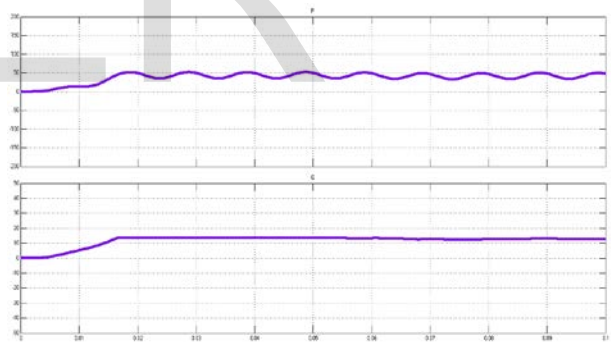

Fig. 9. Real Power Vs Time and Reactive Power Vs Time

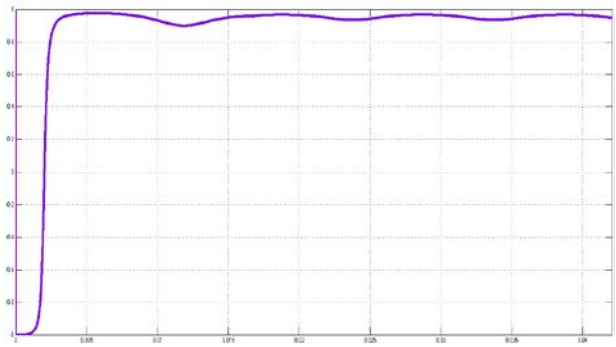

Fig. 10. Power Factor Vs Time

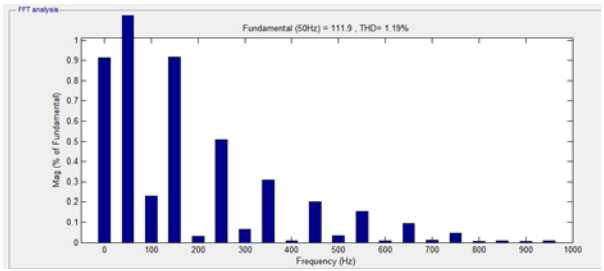

Fig. 11. FFT Analysis

8 Conclusion

In this paper, a proposed concept is the design of a DSTATCOM Inverter.The proposed inverter suggests a new way in which small renewable sources can be used to provide control and support in distribution systems.The MMC DSTATCOM inverter hs the ability to provide utilities with reactive power compensation.The aim of a paper to combine the two concepts of DSTATCOM and Inverter using the most advanced MMC Topology to make a single unit called DSTATCOM Inverter.Here MMC is used as the Voltage Source Converter (VSC) Topology tomake a DSTATCOM able to regulate reactive and active power and also it would connect solar power and grid.This inverter provides utilities with more knowledge at end points of the distribution lines which is a cost effective inverter and has a capability to regulate active and reactive power on distribution.By using MMC,with 5-levels,the DSTATCOM Inverter has enhanced the reactive power compensation and power factor in feeder lines.

References

[1] J.T.Bialasiewicz, "Renewable energy systems with photovoltaic power generators: Operation and Modelling", Ind.Electronics, IEEE Trans. On,vol.55,pp.2752-2758,2008

[2] Juan Manuel Carrasco,Member,IEEE,Leopoldo Garcia Franquelo,Fellow,IEEE,Jan T.Balaisiewicz,Senior Member,IEEE,Eduardo Galvan,Member,IEEE,Rmon C.Portilo Guisado,Student Member,IEEE,Ma.Angeles Martin Prats,Member,IEEE,Jose Ignacio Leon,Studet Member,IEEE,and Narciso Moreno-Alfonso,Member,IEEE, "Power – Electronic Systems for the Grid Integration of Renewable Energy Sources:A Survey",IEEE Transcation On Industrial Electronics,Vol.53,No.4,August 2006.

[3] Soren Backhoej Kjaer,Member,IEEE,John K.Pedersen,Senior Member ,IEEE,and Ferde Blaabjerg,Fellow,IEEE, "A Review of Single Phase Grid-Connected Inverters for PV Modules", IEEE Transcations On Industry Applications,Vol.41,No5,September/Octomber 2005.

[4] Salvador Alepuz,Member,IEEE,Sergio Busquets-Monge,Student Member,IEEE,Josep Bordonau,Member,IEEE,Javier Gago,David Gonzalez,Member,IEEE,and Josep Balcells,Member,IEEE, "Interfacing Renewable Energy Sources to the Utility Gridusing a three-level Inverter",IEEE Transcations On Industrial Electronics,Vol.53,No.5,October 2006.

[5] Gabriele Grandi,Member,IEEE,Claudio Rossi,Member,IEEE,Darko Ostojic,Member,IEEE,and Domenico Casadei,Senior Member,IEEE, "A New Multi-level Conversion Struture for Grid-Connected PV Applications" , IEEE Transcations On Industrial Electronics,Vol.56,no.11,November 2009.

[6] J.Rodriguez, J.S.Lai and F.Z.Peng, "Multi-level inverters: Survey of topologies, controls and applications," industry Applications, IEEE Transactions on, Vol.49, No.4, pp.724-738, 2002.

[7] L.M.Tolbert,F.Z.Peng, "Multi-level Converters as a utility interface for renewable energy systems", in Proceedings of 2000 IEEE Power Engineering Society Summer Meeting,pp.1271-1274,2000

[8] Kouro,S.,Malinowski,M.,Gopakumar,K.,Pou,J.,Franquelo,L.G.,Bin Wu,Rodriguez,J.,Perez,M.A.,Leon,J.I.., "Recent advances and industrial applications of multi-level converters", IEEE Electronics,IEEE Transaction on,Vol.57,no.8,pp.2553-2580,2010.

[9] B.Gemmell,Siemens USA,.Dorn,D.Retzmann,D.Soerangr,Siemens Germany, "Prospects of multi-level VSC technologes for power transmission", in Proc. IEEETransmission and Distribution Conference and Exposition,pp.1-16,2008.

[10] R.Marquardt and A.Lesnicar, "New concept for high voltage – modular multi-level converter", Power Electronics Specialists Conference, Aachen, Germany, 2004.

[11] A.Lesnicar and R.Marquardt, "An innovative modular multi-level converter topology suitable for a wide power range", IEEE Power Tech Conference Proceedings, Bologna, Italy, 2003.

[12] M.Saeedifard, R.Iravani, "Dynamic performance of a modular multi-level back-to-back HVDC System", Power Delivery, IEEE Trans.On, vol.25, no.4, pp.2093-2912, 2010.

[13] Alpesh Mahyavanshi, M.A.Mulla and R.Chudamani, "Reactive Power Compensation by controlling the DSTATCOM," International Journal of Emerging Technology and advanced Engineering, Volume 2, Issue 11, November 2012.

[14] Norman Mariun, Senior Member, IEEE, Hendri Masdi, S.M.Bashil, Member, IEEE,A.Mohamed,Senior Member,IEEE, Sallelhudin Yusuf,Member,IEEE., "Desin of a prototype D-STATCOM using DSP Controller for voltage sag mitigation", IEEE Conference 2006.

[15] C.Tareila, P.Sotoodeh, R.D.Miller., "Design and control of a single phase DSTATCOM INVERTER for wind application,"Power Electronics and Machines in Wind Application PEMWA 2012, Denver, Co, 2012.

[16] J.Kim,S.Sul,P.Enjeti, "A carrier based PWM method with optimal switching sequence for a multi-level four-leg voltage-source inverter", Industry Applications,IEEE Transactions on,Vol. 44, no. 4, pp.1239-1248, 2008.

[17] J.Pou,J.Zaragoza,S.Ceballos,M.Saeedifarad,D.Boroyevich, "A carrier based PWM strategy with zero- sequence voltage injection for a three-level neutral point clamped converter", Power Electronics,IEEE Transactions on, vol.27, no.2, pp.642-651, 2012.